MEN OF RUSSIAN SCIENCE

Victor Dukor

PYOTR NIKOLAYEVICH LEBEDEV

FOREIGN LANGUAGES PUBLISHING HOUSE
Moscow

P. N. LEBEDEV

MEN OF RUSSIAN SCIENCE

Victor Dukor

PYOTR NIKOLAYEVICH LEBEDEV

FOREIGN LANGUAGES PUBLISHING HOUSE
Moscow
1956

Translated from the Russian
by D. SKVIRSKY

CONTENTS

	Page
Introduction	5
Business or Science?	6
Abroad	11
Choosing a Road in Science	15
Doctor of Science	24
Riddle of the Comets	30
Back in Moscow	36
Action of Waves on Resonators	39
Studying the Properties of Electromagnetic Waves	51
Pressure of Light on Solid Bodies	57
Establishing a School	72
Pressure of Light on Gases	79
Lebedev as a Pedagogue	89
A New Plan	97
Magnetometric Study of Rotating Bodies	101
The Last Years	106
Conclusion	113

INTRODUCTION

This book is devoted to Pyotr Nikolayevich Lebedev, a remarkable Russian scientist who lived and worked in the late 19th and early 20th century.

The story of Lebedev's life is a striking and instructive example of selfless devotion to science. His name is associated not only with discoveries in the field of physics; he is known as the founder and head of the first major school of Russian physicists, which played a noteworthy part in advancing science in this country. Lebedev also founded Russia's first big research laboratory, where many prominent physicists were trained.

Lebedev died in his prime, at the age of 46. The extremely trying conditions under which he had to work, accounted for his early death more than anything else. They prevented him from carrying out his far-reaching plans of scientific research and education in Russia.

In this book an attempt is made to describe in popular form the essence of Lebedev's discoveries and to tell about his principial scientific works. At the same time the book deals with the main aspects of the short but colourful life and work of this remarkable man.

BUSINESS OR SCIENCE ?

Pyotr Nikolayevich Lebedev was born in Moscow on March 8, 1866 into the family of a rather wealthy and extraordinarily cultured merchant.

He was the eldest son in the family and his father, intending him for a business career, sent him to the German Commercial School. In those days, many of the schools were run by foreigners and it was the fashion among merchants to educate their children at them. The Commercial School gave young Lebedev an excellent knowledge of German which was of use to him in the future, taught him to be orderly and systematic in his work and, strangely enough, made him hate business.

Scientific work attracted Lebedev very early in life. He was an avid reader and frequently spent his Sundays in the school physics laboratory. A. N. Beknev, a widely-read army electrical engineer whom Lebedev knew, did much to awaken in him an interest in physics and, particularly, in electricity. Subsequently, when Lebedev was a rising scientist, he wrote to Beknev, his first teacher:

"I haven't forgotten how radically you changed my whole outlook on life with the electrical machine that you made from a plate of glass and the pads of your army gloves.... I was both happy and bewildered when that contraption worked. You see, it was not easy to part with the idea that the 'electricity' Malinin (the author of a textbook on physics that was wide-spread at the time—*V.D.*) speaks about was

something sacred and could only be obtained with costly, shining apparatus in the learned atmosphere of a physics laboratory."

Beknev fanned young Lebedev's interest in scientific problems, taught him to deal critically with "arm-chair" science, and developed his already manifest aptitude for independent thinking. An excerpt from the memoirs of A. A. Eichenwald, a Russian physicist and a childhood friend of Lebedev's shows how wide Lebedev's range of interests was even in his youth:

"At home he was always busy building or experimenting with various kinds of electrical machines, reading up mainly on physics and electrical engineering, or inventing things and carefully recording them in blue-prints with explanatory notes which we jokingly called 'patents.' Naturally, there were many flying machines among these 'patents,' but there were also dynamos, telegraphs and voltaic arc regulators; as a matter of fact, there was even a scheme for obtaining nitric acid from water and air."

Lebedev's father, who hoped to see his son in business, wanted to steer him away from this sort of activity by buying him a horse and arranging frequent parties and amateur shows at the house. Lebedev was not at all indifferent to all this, for he was a lively, high-spirited lad. His world was not centred on physics alone: he liked athletics, music, literature and the theatre.

But he was not carried away by this gay and easy life and he did not see any attraction in the prospect of becoming a successful businessman. Science irresistibly drew him into its orbit. He cut short his commercial schooling and enrolled in a Real School.[1]

At the Real School, inspired by dreams of a scientific career, the boy tried his hand at independent creative work.

---

[1] A secondary school where modern languages were taught instead of the classical. The subjects included natural sciences and mathematics.—*Tr.*

From the 6th class onwards, he kept a record of his inventions. It is interesting to observe that subsequently he made critical remarks such as "already invented," "absolutely impracticable" and even "nonsense" in the margins opposite many of these notes.

Young Lebedev's very first experiments are striking for their boldness and scope. At the age of 16 he undertook to solve complex technical problems which were obviously still beyond his reach.

He described one of his first experiments in a letter to Beknev many years later: "I am not sure if you knew of the unipolar dynamos I was working on when I was at the Real School, but I feel I must mention a rather 'expensive' lesson. On the basis of the theories existing in those days, I invented a 40 h.p. motor—I still maintain that it was a clever one—to fill an urgent order from the managing director of the Gustaf List Works (a machine-building works in Moscow—*V. D.*); when I finished the designs, the machine was cast, made (the thing turned out to weigh over half a ton) and ... just didn't work. That crowning fiasco marked the beginning of my career as an experimenter...."

After finishing the Real School, Lebedev had to atone for this "sin"; for a few months he worked without pay as a technician at the List Works. There he acquired some technical knowledge which proved useful to him later.

Courage and talent could not, however, compensate for a lack of knowledge. Lebedev was fully aware of this and decided to continue his education at an institution of higher learning.

He enrolled in the Moscow Technical School (now the Moscow Bauman Higher Technical College), which was the best institution of its kind at the time.

The lecturers included such eminent Russian physicists as professors P. A. Zilov, N. P. Sluginov and V. S. Shcheglyaev. Incidentally, Lebedev conducted his first researches (which, unfortunately, were not published) in Professor Shcheglyaev's laboratory.

The ambition to work on inventions, which awoke in Lebedev early in life, was with him night and day, and although he had an extensive programme of studies to cover, he gave much of his energy to independent, creative work on technical inventions. The young inventor did not have an easy time. He enrolled in the Technical School with his "head full of all kinds of problems" and a certain amount of industrial experience which he had acquired at the List Works, and he was not prepared, to use his own words, for the "utterly absurd and monstrous system" in force at the school; already aware of what was needed in practice he "had to draw, for example, things that were so stupid that three days of practical work would have been more than enough to show their worthlessness." The students who "did what was required of them with the sole thought of passing the examinations" infuriated him.

Working alone, without guidance, Lebedev often found himself up against technical problems he could not solve. But he doggedly went ahead with whatever work he set out to do. Failures did not discourage him. He was always full of ideas and when one project fell through he started on another.

At the Technical School he became a master joiner, turner and fitter and subsequently taught his assistants the fine points of constructing various precise mechanisms. It was here that the foundation of his skill as an experimenter was laid. The number of inventions that Lebedev, first as a schoolboy and then as a student, worked on ran into scores.

The time soon came when he grew dissatisfied with the restricted technical aims of his work. His failures made him reflect on the essence of the physical processes on which his technical constructions were based. Problems of theoretical physics began to attract him and he became absorbed in analyzing the causes of various physical phenomena. "Without noticing it," he wrote, "I passed from engineering into the sphere of science."

Science enthralled young Lebedev. He gradually found that his true vocation lay in research. The solution of individual technical problems did not appeal to him. He was attracted by scientific problems connected with a study of the essence of physical phenomena. He soon decided to devote his life to research in the field of physics, but that required thorough scientific training. The Technical School could not give him the training he needed while the doors of the University were closed to him; persons finishing Real School were barred from the University.

According to the rules of the day, it was necessary to know Latin and Greek in order to enter the University. These languages were not taught in either the Commercial School or the Real School. Young Lebedev found himself face to face with the acute problem of how to attain his purpose.

Help came in the form of advice from Professor Shcheglyaev, who knew that Lebedev was talented but in need of the experienced guidance of a distinguished scientist. The professor advised him to go to Germany to study under August Kundt, an eminent scientist and head of a school of physics. Lebedev took this advice and went abroad.

ABROAD

Young Lebedev arrived in Strassburg in October 1887, with a determination to search for knowledge. He was warmly received by Kundt and given every opportunity of studying and carrying on practical work in the latter's laboratory. Simultaneously, he attended lectures at the University by distinguished scholars.

There were excellent provisions for research training at Kundt's laboratory. "Kundt's principal aim," Lebedev wrote, "was to acquaint beginners with all the inner aspects of research and give them an opportunity to learn to work independently. He gave everyone full freedom not only in choosing the subject, but also in elaborating it. Kundt particularly encouraged any sign of independent thinking ... regarding it as an earnest of future success."

To Lebedev, who was accustomed to think and act on his own, working conditions such as these were like a dream come true. He began by eagerly studying literature on physics, appreciating how urgent it was for him to fill in the gaps left by a mixed education and to bring himself abreast of current scientific problems. So many questions occupied the young scientist that he did not have time to look into them all. He drew up a strict time-table and gave up all amusements.

One of Lebedev's fellow pupils was a young Russian, Boris Borisovich Golitsyn by name, who later became an academician and an outstanding physicist. They were great

friends and helped each other in their work. At dinner, in order to save time, they would take turns to report on their day's reading.

The resourcefulness that had marked Lebedev as a boy and developed with particular force at the Technical School now helped him to find the necessary time for theoretical studies.

In a biographical essay on Lebedev, Academician P. P. Lazarev describes a typical episode. In the experiments for one of his researches, he often used an obsolete mercury suction pump which needed constant additions of mercury while it worked; much time was wasted on this "dull" operation. The young scientist designed and built a device which fed the mercury automatically. That enabled him to tackle theoretical problems while the pump did its work.

Lebedev kept up a lively correspondence with his mother (his father died before he left for Strassburg). Lebedev's mother played a great part in his life. He always told her of his ideas, feelings, plans and failures, and when any of his researches were successful he shared his happiness with her. The part played by his mother is vividly shown in a letter Lebedev wrote in 1897 to A. N. Amfiteatrova, a family friend. Here is an excerpt which reveals Lebedev's tenderness and devotion:

"I loved my mother more than anything in the world and now I have lost her, and with her it seems that I have lost all that was good in me. She believed in me, and that urged me on; she was very strict about my shortcomings, and I tried not to show them.... She was my conscience: I never thought of doing anything about which I could not tell her in the evening. And she loved me as only a mother can love: wisely and boundlessly. And I knew it...."

Science absorbed Lebedev more and more. "I never thought," he wrote to his mother in 1888, "that one could grow so attached to science."

In another letter he remarked: "For me, besides physics, there is only sleep. I go home only to sleep and get my morn-

ing coffee.... I know of no greater pleasure than physics and the laboratory."

Simultaneously with his theoretical studies, he enthusiastically took up independent research, trying his hand in various fields of physics. But he did not dwell long on any of the problems he took up. He never hesitated to drop any research if he thought it insufficiently important and was always on the look-out for something worth-while.

The letters he wrote to his mother at this time reflected the happiness that creative work gave him; they were filled with the problems that worried him and the host of ideas that came to his mind and prevented him from concentrating on any one particular problem.

Things did not always run smoothly. There were moments of failure and this would cause the young scientist to doubt his strength and ability to carry out major scientific undertakings. Fatigue from overwork sometimes made him waver in his purpose. "There are moments," he wrote to his mother, "when it seems to me that I had over-estimated myself and that all your cares and hardships[1] on my account were in vain and that I brought them on you for my own pleasure." But these moods were rare; they passed quickly and Lebedev zealously resumed his work.

An experienced scientist and teacher, Kundt was quick to see that Lebedev was very talented. He did not embarrass his pupil in any way and provided him with all the conditions to carry out his experiments. Indeed, Lebedev never lacked ideas and Kundt used to say that he gave birth to at least a score of them every day.

The features that distinguished the future scientist began to take shape during those years. These were independence, an amazingly fruitful scientific mind, and daring in raising problems and in seeking original solutions for them.

In Strassburg, Lebedev soon completed his training and started his own scientific work.

---

[1] His father's death left the family in strained circumstances, for Lebedev's studies abroad required considerable means.—*V.D.*

Kundt was often fascinated by his pupils's profound ideas. Lebedev described a characteristic episode in a letter to his mother:

"Today, I really nailed him (Kundt) down and again explained what he had told me was nonsense. Today, he went into raptures, shook me by the hand and shouted: 'This is a splendid idea. . . .' Thin metallic layers, precipitated on glass, form the most important feature of my forthcoming work. Kundt, who is really the world's leading expert in this field, has promised to prepare them for me personally according to my specifications."

The young scientist's ideas frequently clashed with those of his teacher. "Kundt," he wrote, "often reprimands me justly, but on quite a few occasions he showered reprimands on me because our opinions differed."

Throughout his stay abroad and to the very end of his life Lebedev kept a diary of his scientific activities. He conscientiously recorded in thick ledger-like copy-books all the projects, plans and ideas that held his attention.

These very valuable documents help to establish the whole process of Lebedev's creative work. The amazing scrupulosity and precision of these notes bear out Lebedev's industry, while their contents reflect the mind of a profound thinker with an exceedingly rich imagination.

CHOOSING A ROAD IN SCIENCE

> "There is no royal road to science and only those who do not dread the fatiguing climb of its steep paths have a chance of gaining its luminous summits."
>
> (Marx, *Capital*, Vol. I, p. 21.)

In Strassburg, Lebedev studied various branches of physics, became proficient as an experimenter and critically mastered the ideas of the leading physicists of his day. Now the time had come for him to take his doctor's degree, which was to conclude his studies abroad. At last, the necessity arose for him to choose a definite subject for a dissertation which would make him eligible for a doctor's degree in philosophy.[1] The dissertation itself was not of prime importance to him. He had decided to devote himself to science, to physics. This was not just a fancy; he fully realized that scientific work had become his profession. But the edifice of physical science is huge; it is constantly in the process of construction and extension. Lebedev had to find his place in this building and he began to search for his own "little corner" in science.

He was not a scientist who drifts with the tide. Independent and original in his ideas, he could at once evaluate the

[1] In those days, the practice abroad was to confer the degree of Doctor of Philosophy for a dissertation on a subject in the natural sciences; in the humanities the degree conferred was Doctor of Law or Doctor of Theology.—*V.D.*

problems arising in his day as a result of the rapid progress being made in physics. He chose to investigate electromagnetic phenomena. A virgin sphere of research in those days, it subsequently bore mankind extremely rich fruits.

The close of the 19th century was marked by a rapid advance in lighting and electrical engineering. The expanding industry was gaining a powerful base and that compelled scientists to investigate the practical applications of electromagnetism, but this task could not be carried out without first developing a guiding physical theory. This theory was shaped in the course of an involved and tense struggle between different trends of physical thought; it would be pertinent to mention these trends briefly.

Until the beginning of the 19th century, electricity and magnetism were practically virgin spheres of physics. Hardly anything was known about the nature of these phenomena. The belief was that electrical phenomena were caused by a special kind of electrical fluid and that, similarly, a magnetic fluid was responsible for magnetic phenomena. Further, it was held that these fluids were imponderable and that the attraction or repulsion of their particles were governed by a law discovered by Coulomb.

Electrical, magnetic and optical phenomena were regarded as being completely detached from each other; it was considered that they were totally unrelated.

After Volta's discoveries in the beginning of the 19th century, it was established that electricity can be generated by chemical processes and that this, in its turn, can call forth chemical action (for example, decomposition of water). The production with a voltaic pile of high-tension direct current led to the discovery of other relations. In 1802, V. V. Petrov, a Russian physicist, found that electric current can produce heat and light (the phenomenon of the electric arc).

Finally, in 1820, Oersted, a Danish physicist, made the extremely important discovery that electric current affects

a compass needle, thus showing that there is a relation between electricity and magnetism. That discovery instantly started a number of scientists on experimental research into the relation between electrical and magnetic phenomena and on a search for the laws governing them.

For the first time, scientists raised the question of formulating a theory linking electrical and magnetic phenomena. Such was the electrodynamic theory put forward by the French physicist André Ampère.

His theory held that interaction between electrified bodies, magnets, and conductors and electricity takes place without the participation of the surrounding medium. The transmission of the action of one body to another takes place instantaneously, hence the name "remote effect"; consequently, time is not needed for the transmission of force.

Such concepts were successfully used in the building up of mechanics and it was believed that they could be applied to electromagnetism as well.

As the development of physics showed, electromagnetic phenomena cannot be explained in terms of mechanics; although physical concepts have been fruitful in that science, they proved to be barren in the sphere of electromagnetism. Therein lies the reason why the views of Ampère on electromagnetism did not lead to any substantial success.

Another trend in physical thought is linked with the name of the great English physicist Michael Faraday.

Faraday put forward a new physical theory on the nature of electrical, magnetic and light phenomena. His theory played an enormously big role in advancing science.

Its essence lies in the following. When bodies are electrified or magnetized, or when they act as conductors of electricity, the medium around them undergoes certain physical changes. These changes can be revealed by placing so-called test bodies near the investigated body. For example, if we use iron filings as test body and sprinkle them on a sheet of paper near a magnet they will arrange themselves in a definite pattern (fig. 1). A similar picture may be obtained in

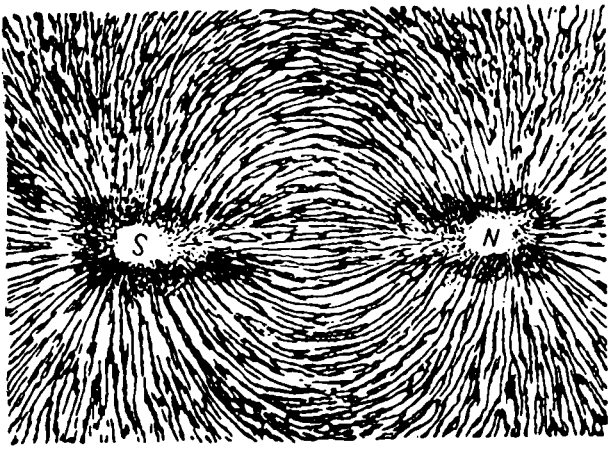

Fig. 1

an experiment with electrified bodies if, for instance, two charged spheres are immersed in vaseline oil to which quinine powder has been added. The quinine crystals, acting as test body, will, much in the same way as the iron filings, form into a definite pattern (fig. 2). If magnetic needles are placed around a wire charged with direct current, they will lie along the circumference like beads on a string (fig. 3). The lines along which test bodies arrange themselves are called lines of force.

An electrostatic field forms around an electrified body and a magnetic one around a magnet or a charged wire. The nature of these fields can be elucidated by the number and direction of the lines of force. The direction and density of these lines of force indicate the direction and magnitude of the forces acting in the field on electrical charges or magnets and leading to a definite disposition of the test body. An electrical force acts on the test charge introduced into an electrostatic field along the latter's

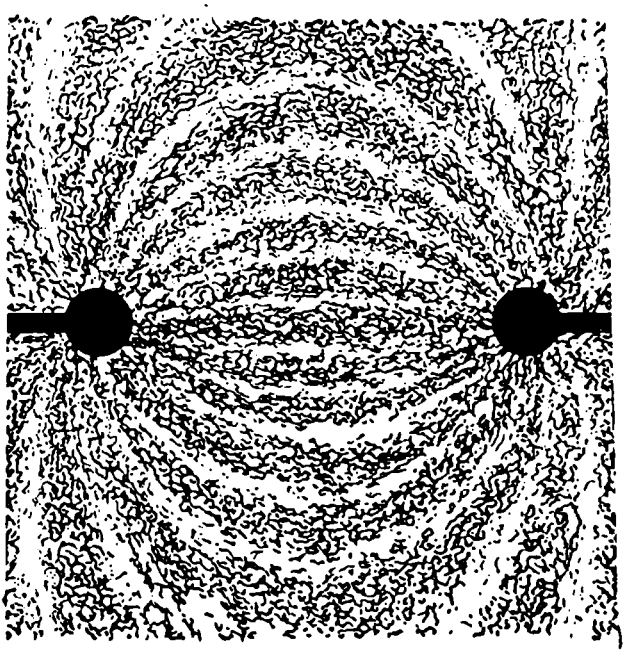

Fig. 2

lines of force, while along magnetic lines of force the test body is subject to the action of magnetic forces. The magnitude of these forces define the main character of the electric or magnetic fields, and is called the intensity of the field. According to Faraday, the nature of these forces lies in the physical processes taking place in the medium around the interacting bodies. In contrast to Ampère's doctrine of remote effect, Faraday's theory holds that electrical and magnetic forces are transmitted from one body to another through the material medium around them (close effect).

Faraday's physical views were further developed by another English physicist—James Clerk Maxwell—who in 1864-73 created the theory of electromagnetic phenomena, which for the first time united electrical, magnetic and light phenomena into a single system.

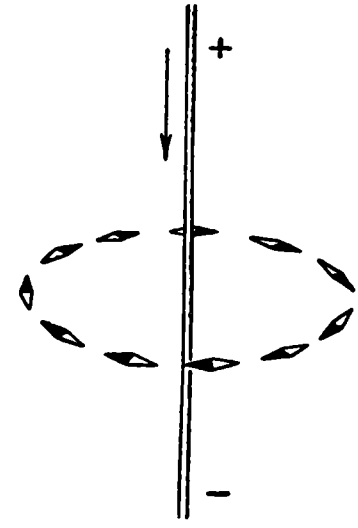

Fig. 3

Maxwell's teaching provided a theoretical basis for the wealth of experimental data obtained in the field of electromagnetic phenomena and made it possible to foresee a new physical phenomenon, whose presence was not suspected by scientists.

This concerns the existence of electromagnetic waves, one of the most important discoveries in the history of mankind, which ushered in a new epoch in the development of science and engineering. Maxwell proved that if for one reason or another a change of intensity takes place in any part of an electrical or magnetic field (which in terms of lines of force means a change in the number and pattern of these lines), electromagnetic waves, in which electrical and magnetic forces are integrated and change in magnitude and direction, will spread from this part in all directions. These forces act perpendicularly to each other

and in the direction of flow. For example, if in some manner two dissimilarly charged spheres are quickly brought close together and then taken apart, the number of lines of force and their pattern at a given part of the field will change and consequently there will be a flow of electromagnetic waves from this place (fig. 4).

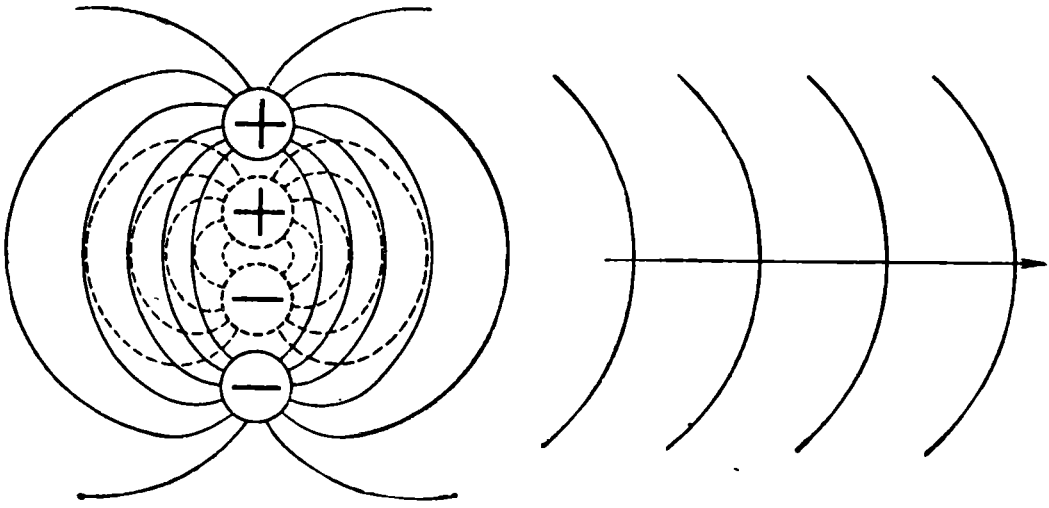

Fig. 4

According to Maxwell's theory, light is only a particular case of electromagnetic phenomena. The nature of light was explained in a new way. Prior to the appearance of the electromagnetic theory, light was thought to be the elastic oscillation of ether, an extremely fine material medium filling interplanetary space and the space between the particles of matter. This was the mechanical theory of light. It suggested that ether has the properties of an elastic body and was for that reason called the "optics of elastic ether." According to the mechanical theory, a source of light causes an oscillation in ether in the same way as a blow with a hammer causes an anvil to vibrate. Thus, it was considered that light is made up of the waves of certain elastic deformations of luminescent ether.

The new theory, meanwhile, held that light consists of electromagnetic waves and that the only difference between

light waves and the waves received through the oscillation of charged spheres is in their length. Light, Maxwell's theory declared, consists of very short electromagnetic waves.

Electrical, magnetic and light phenomena, which formerly had been regarded as isolated from each other, were found to be united in a harmonious scientific system.

But Maxwell's theory was only mathematical.

A hard battle had to be fought in order to win universal recognition for the theory, because the views of Faraday and Maxwell conflicted with the ideas developed by Ampère and his numerous followers. Besides, there was practically no experimental data to support these views. For that reason the theory was not treated seriously for almost ten years—from 1864, when Maxwell expounded it in general outline, to 1874. To be recognized, the new hypothesis needed experimental verification of all the fundamental conclusions drawn by Maxwell.

This was undertaken by the Russian physicist A. G. Stoletov and his pupils—P. A. Zilov, R. A. Kolli and N. N. Shiller. They produced the first proof that the new theory was correct.

The experiments conducted by the German physicist Heinrich Hertz in 1887-88 were a turning point in the struggle for the new idea in the development of the theory of electromagnetism. They showed that electromagnetic waves exist and that their properties have much in common with the properties of light. But this was only the first step in advancing this most important branch of physics. The success of the young theory had to be consolidated with further experimental data.

Besides, physics was still faced with an unsolved problem, which was regarded as a matter of principle: scientists had to explain the relation between material objects and light, and show how the interaction between light and solid, liquid or gaseous bodies manifests itself. Maxwell's theory pointed to one of the forms of interaction. It stated that when light falls on a body it must repulse it, exert pressure on its sur-

face. But this theoretical conclusion was not confirmed by experiment.

A far more profound and complex problem consisted in the following. At that time, scientists were beginning to make wide use of the molecular-kinetic theory of matter, according to which all bodies in nature consist of separate, constantly moving particles or molecules. Maxwell's theory inferred that light consists of electromagnetic waves and it was therefore necessary to elucidate how molecules of matter conduct themselves as regards these waves.

It must be remembered that in those days the molecular-kinetic theory was not accepted by all scientists. They angrily debated the possibility of developing physics and chemistry on the basis of atomic concepts.

At the end of the 19th century, Mach, Ostwald and other physicists of the idealistic school opposed the molecular-kinetic theory in an attempt to divert physics from the correct, materialist road. Taking advantage of the inadequate knowledge in those days of the structure and properties of molecules, they denied their very existence, considering the molecule an unwanted invention.

If the conduct of molecules as regards electromagnetic waves could be explained and the experimental proof furnished to show that the theoretical views on the properties of molecules were correct, the existence of molecules would thereby be confirmed and the theories of the idealists dealt a shattering blow.

Lebedev appreciated the decisive importance of experiments that would confirm and promote the new physical views.

As a scientist trained in the spirit of the traditions laid down by Lomonosov, Lebedev revolted against the speculations of the idealists. In Maxwell's theory he was able to discern the beginning of a broad road which led to the solution of many problems concerning the structure of matter and opened new possibilities for developing science and engineering. And he set himself the task of providing Max-

well's theory with a foundation built up by experiments. When the time came to decide upon plans for future research (and it was namely now that the young scientist made them), he chose to study the interaction between electromagnetic waves and molecules and to prove by experiment the correctness of all the conclusions of Maxwell's theory. This was a very important question confronting physicists in those days and it became the corner-stone of Lebedev's later researches.

It was not a problem that could be solved with a single experiment. Lebedev had before him a long, intricate and laborious task in a completely new field of research. He knew that the road he had chosen was a torturous one, but he did not fall back in the face of difficulties.

DOCTOR OF SCIENCE

> "In electricity man has found the means for resolving the most diverse and most fantastic problems of his mind."
>
> (*A. G. Stoletov.*)

How does an electromagnetic wave act on a molecule of matter? Before embarking on an investigation of this question, it is necessary to have a clear idea of what molecules[1] are and to study their electrical properties. Lebedev devoted his doctor's dissertation—*Measuring Dielectric Constant Vapours and the Mossotti-Clausius Theory of Dielectrics*—to this subject and it formed the first of a series of remarkable researches.

Before proceeding to describe this work, we must examine what the dielectric constant of matter (at present it is called "dielectric permeability") is. The following experiment will help:

Let us take a condenser comprising two metal plates. After the air between the plates is removed with the help of a vacuum pump, the condenser is charged from a source of direct current, for example, an accumulator with a set voltage at its poles.

---

[1] It must be borne in mind that no elementary particles—electrons, protons and so forth—of which atoms and molecules are built, were discovered in this period.—*V. D.*

A positive charge will accumulate on one plate and a negative charge—on the other. The condenser is then disconnected from the current source and the quantity of electricity accumulated in the condenser measured.

Now let us place an insulator—a dielectric (for example, a piece of rubber, glass, distilled water, or gas)—between the plates and repeat the operation, i.e., charge the condenser with the dielectric from the same accumulator, then disconnect it and again measure the quantity of electricity that had accumulated in it. We shall see that in the second case, the condenser "sucks in" more electricity and that the quantity depends on the kind of insulator between the plates. Why?

In order to answer that question, we must explain what takes place in the dielectric when it is influenced by the condenser's electric field.

Today we know that matter consists of molecules, each of which is a more or less intricate system with an equal number of positively and negatively charged particles distributed and interconnected in a definite manner.

With some dielectrics this distribution of charges in the molecules is such that there is a large concentration of positively charged particles at one "end" of the molecules and a concentration of negatively charged particles at the other. These are called polar molecules. A polar molecule may be roughly likened to a pair of equal differently-charged particles located at a certain distance from each other, i.e., to a so-called electrical dipole (fig. 5).

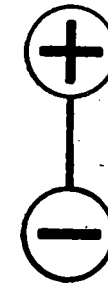

Fig. 5

If the condenser is not charged, we shall find that in a dielectric consisting of polar molecules there will be complete disorder in the arrangement of these molecule-dipoles (fig. 6). When the condenser is charged, the positively-charged plate will attract the negative poles of the molecules, while the negatively-charged plate will attract the positive poles. The dipoles will point in the direction of the field, much as the needle of a compass points in

the direction of the lines of force of a magnetic field (fig. 7). In speaking of this phenomenon, physicists say that the dielectric is becoming polarized.

Polarization is a phenomenon that is characteristic of all dielectrics and not only of those in which the molecules themselves are polar. The fact is that even if the molecule of a dielectric is not a dipole in itself, the action of the condenser's field will somewhat displace the charged particles forming the molecule: the positive ones—in the direction

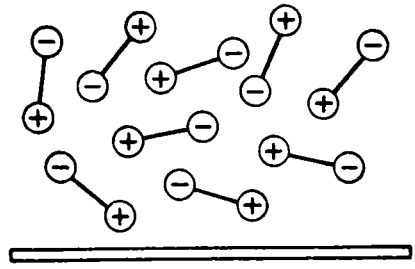

Fig. 6

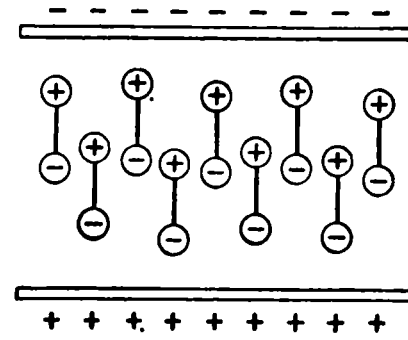

Fig. 7

of the condenser's negative plate, and the negative ones—in the direction of the positive plate. In this case, the field itself deforms the molecules of a dielectric and makes them dipoles. To one degree or another, a similar displacement of charged particles along the lines of force of a field is experienced additionally even by the molecules of a dielectric which are dipoles from the very beginning, i. e., are polar by nature.

Thus, we see that any dielectric becomes polarized under the action of the field of a condenser, and when that happens, its molecules represent a system of well-arranged dipoles. Meanwhile, a certain amount of surplus negative charges will appear on the surface of the dielectric facing the positive plate of the condenser, while on the opposite surface there will be some positive charges (fig. 7); the charges "jump out," as it were, to the surface of the dielectric. Called forth by the action of the condenser's field, these surplus

charges, in their turn, attract a certain additional amount of electricity to the plates of the condenser from the source (accumulator in our experiment). The greater the dielectric's degree of polarization, i.e., the higher the concentration of surplus charges on its surfaces facing the plates of the condenser, the more additional electricity will be accumulated by the condenser.

In physics, the degree of polarization of matter is denoted by a value called the dielectric constant or dielectric permeability. The more matter is polarized, the higher is its dielectric permeability. It is especially high in matter with strongly polarized molecules (water, for example). Dielectric permeability is low in air and other gases.

Today we are making wide use of this idea about polarization. It is helping us to understand many natural processes. But when Lebedev worked on his dissertation, nothing was known about the structure of the molecule and, besides, many scientists doubted its very existence.

The supporters of the molecular theory of the structure of matter based their investigations on the hypothesis that molecules are ball-shaped electricity-conducting bodies. On the basis of this hypothesis, a number of physicists, Mossotti and Clausius, in particular, developed a theory that linked the dielectric permeability of matter with its density. The Mossotti-Clausius theory held that the more molecules there are in every unit of volume of a given substance, the higher will be this substance's dielectric permeability. To prove this theory by experiment meant confirming the idea of the molecular structure of matter and showing that the action of an electrical field on matter can be explained by the electrical properties of molecules. This was a very important problem and Lebedev elaborated on it in his dissertation.

The following is a brief outline of Lebedev's research, and for clarity's sake, we shall use the modern notions about the molecule-dipole. We have already said that the value of the dielectric permeability of an insulating substance may be gauged by the number of electric charges "jumping out" to

its surface towards the plates of a condenser (fig. 7). It is easy to see that the greater the number of molecules per unit of the volume of a dielectric, the more charges will "jump out" to its surface under the influence of the electric force acting from the direction of the condenser plates. Consequently, the conclusion that suggests itself is that the greater the density of the insulating substance, i.e., the more molecules it has per unit of its volume, the higher is its dielectric permeability.

It must be noted that this argument scarcely reflects the properties of solid dielectrics, since in them the phenomenon of polarization is much more complex. But these simple and striking ideas prove to be sufficiently exact when applied to gases.

That is the very circumstance that Lebedev took advantage of. He conducted a few experiments which verified the already-mentioned conclusion on the interdependence between the dielectric permeability and density of matter. He used various gases and measured the dielectric permeability of each at different temperatures and pressures.

If there is gas between the plates of a condenser and its pressure is increased by the introduction of more gas or by compression, the investigator will find that there will be a greater number of molecules per unit of the gas volume, i.e., it will have a higher density. In that case, according to the idea expounded above, the dielectric permeability of this gas must increase. That is exactly what Lebedev observed during his experiments. He painstakingly took numerous measurements with the help of a device that he invented and made. The experimental data thus obtained verified the theoretical concepts of Mossotti and Clausius. In spite of their being very rough, these concepts gave correct expression to certain properties of the molecules of many substances.

Lebedev busied himself with his dissertation and in a letter to his mother at this time he described how he was going about it: "I am busy putting the final touches

to my dissertation: condensing it as much as I can, and throwing out all that can be thrown out in order to make it shorter."

In later years, too, he was extremely strict about the style in which a scientific work should be written. Brevity compounded with clarity was the distinctive feature of all his papers. As a rule, they were short, but every line had a deep content, and this was the style he passed on to his pupils.

In 1891, Lebedev received his doctor's degree after a brilliant defence of his dissertation.

The investigations into the dielectric permeability of gases strengthened certain ideas about the properties of molecules and showed that they are influenced by the action of an electric field and that in a number of cases use may be made of the notion about molecules being electricity-conducting bodies. This marked the beginning of Lebedev's researches which aimed at solving the exceedingly important problem of how an electromagnetic wave acts on a molecule.

Simultaneously with his doctor's dissertation, he drew up a plan of further research in this direction.

While studying questions pertaining to this problem, he found himself on the threshold of an important discovery: he explained in general terms the reason for the appearance of comets' tails and the character of their arrangement; in this connection he outlined the way of studying the interaction between electromagnetic waves and the molecules of matter.

RIDDLE OF THE COMETS

> "Every time a celestial wanderer comes down to us from the bottomless depths of the starry heavens, the name of Bredikhin will be uttered by an enormous number of people."
>
> (*V. K. Tserasky.*)

Down the ages people have watched the movement of comets and for a long time the appearance in the sky of these tailed celestial bodies evoked superstitious fear. Gradually scholars ascertained that comets are as much a part of the infinite universe as the stars and the planets. On the basis of physical laws, scientists determined the orbits in which comets move in space; they calculated the dates of their periodic appearance and studied their structure. It turned out that a comet consists of a small "head" made up of extremely dense matter and a "tail," comprising a huge quantity of rarified matter. In the study of comets, the most important discoveries were made by Fyodor Alexandrovich Bredikhin, the famous Russian astronomer.

However, scientists could not explain one exceedingly interesting circumstance. The matter is that while moving close to the Sun, a comet changes its shape in quite a definite way. As it approaches the Sun, its tail lengthens out with a speed of a million kilometres a day until it reaches a maximum length of 50-100 million kilometres at a point nearest to the Sun; then, as it withdraws from the Sun, its tail shortens in a similar manner: it gradually loses its

beautiful shape, which resembles the tail of a peacock, until it looks like a stump. Fig. 8 is a sketch of the changes that take place in the tail of a comet as it moves round the Sun.

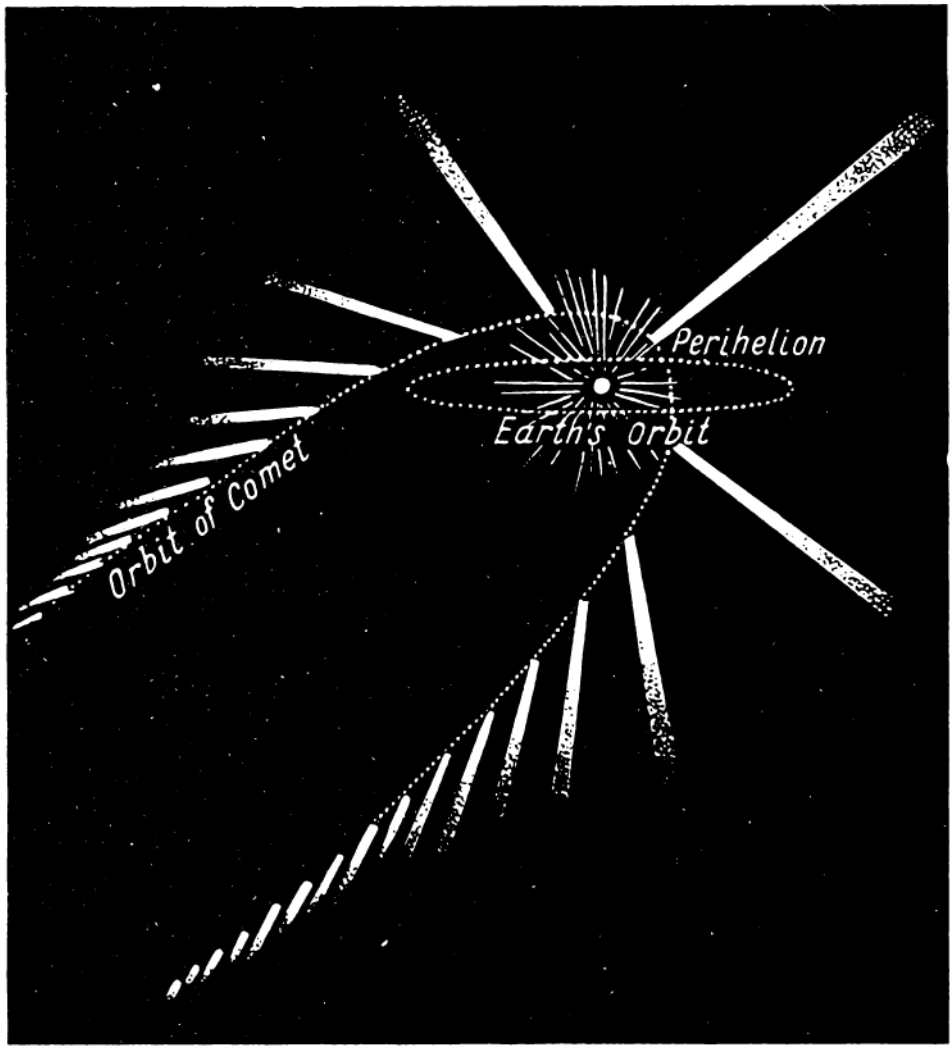

Fig. 8

The most remarkable thing is that the tail points away from the Sun. This fact contradicted the law of gravity, according to which the tail of a comet, like any other material body, should be attracted by the Sun; however, the reverse phenomenon is observed—the tail seems to be repelled by the Sun.

As early as 1619, Johannes Kepler, the German astronomer, offered the conjecture that the repulsive action of the Sun's rays was responsible for this behaviour of a comet's tail; but nobody could plausibly explain the mechanism of this repulsion. When the corpuscular theory of light was advanced, this riddle seemed close to solution: if light, as this theory maintained, was a stream of particles, then the pressure of light rays depended on the impact of these particles. However, at the beginning of the 19th century, the corpuscular theory was overshadowed by the wave hypothesis and the behaviour of a comet's tail became a riddle once more. That explains why prior to Lebedev, astronomers ignored Kepler's surmise.

In 1891, Lebedev wrote a research entitled *On the Repulsive Force of Radiating Bodies* in which he gave a theory explaining the changes in the shape of comets' tails. He indicated the fundamental significance of the fact that besides forces of attraction, in space there are active forces of repulsion which depend on the pressure of light. The following is the essence of the ideas expounded in this research.

By the law of gravity all bodies attract each other with a force that is directly proportional to the product of their mass and inversely proportional to the square of the distance between them. For a long time, gravity was considered to be the only force controlling the movement of matter in the infinite spaces of the universe. Lebedev showed that there are two active forces in the cosmos: attractive forces of gravity and repulsive forces conditioned by the pressure of light. The light radiated by bodies repulses the particles of matter around them.

Let us examine the struggle between the forces of attraction and repulsion on the example of the interaction between the Sun and some cosmic particle. Suppose the particle is a ball with a radius r; the density of the matter of which it consists— σ. The mass of the particle will be equal to the product of the volume of the ball $^4/_3\ \pi_r^3$ multiplied by the density σ. According to the law of gravity, the force with

which the particle is attracted by the Sun will be proportional to the cube of the particle's radius (if the density of the particle's matter is uniform throughout its volume).

Let us now examine the force of light pressure. Under one and the same force of light, the repulsive action of light rays will be proportional to the size of the body's surface on which the light falls. The surface of the cosmic particle-ball equals $4\pi_r^2$; consequently, the repulsive force of light will be proportional to the square of its radius.

Thus, the force of gravity is proportional to the cube of the particle's radius, while the force of repulsion—to the square of its radius. Now suppose that the cosmic particle we are examining becomes smaller and smaller. How will the forces of attraction and repulsion change in this case? Evidently, with a dwindling radius, the particle's mass will diminish much faster than its surface area (the first is proportional to the cube of the radius, and the second—to its square) and, consequently, the force of attraction will decrease much faster than the force of light repulsion.

Reasoning in this way, Lebedev arrived at the conclusion that for very small cosmic particles the force of light repulsion is considerably higher than the force of attraction under the law of gravity. If the radius of dust particles were decreased, Lebedev argued, it would be possible to come down to the size of molecules. Comets' tails consist of gases that are an aggregation of a huge quantity of molecules. It would seem natural to suppose that in drawing nearer to the Sun, each of these molecules experiences an increasing repulsive force of the Sun's rays. With their own pressure, the light rays disperse the particles of the tail, driving them away from the Sun. These arguments could not, however, be considered as being self-evident because they were founded on the rough notions that molecules are tiny balls. "The formulae obtained," Lebedev wrote, "are, nevertheless, applicable only to ... bodies whose dimensions are big compared with the length of the ray waves falling on them; therefore, we can only outline the way of resolving interest-

ing problems pertaining to the repulsion of comets' tails by the Sun and to the interaction of two neighbouring molecules in bodies."

Lebedev realized that the ideas about molecules that he was drawing on for his investigations of the dielectric permeability of gases were, in the given case, inapplicable to the much more complex phenomenon of the interaction of molecules and electromagnetic waves. Further research in this direction demanded more precise ideas about the structure and properties of molecules. These were developed by Lebedev, as we shall learn later, after his return to Russia. We shall only note that the solution of the riddle of the comets and Lebedev's meditations over the reason for this remarkable natural phenomenon were one of the links in the chain of his far-going researches.

The scientists in whose midst young Lebedev worked did not appreciate his original ideas at once. Writing to his mother, he said: "The law I have discovered applies to all celestial bodies. I told this to Winer (the subsequently famous German physicist—*V. D.*). At first he declared that I was mad, but on the next day, realizing what it was all about, warmly congratulated me."

While he was still working for his doctor's degree, Lebedev grew more and more convinced that light exerts pressure on gas molecules but as yet he could not carry his idea beyond the stage of a hypothesis. In order to become a fact, the pressure of light on gases had to be experimentally verified and measured.

He fully appreciated how involved the problem was and realized that there was still much ground to cover before he could prove that light exerted pressure on gases. All that was still to come, but the main thing was that the idea was clear to him. In a letter to his mother in 1891, he wrote:

"I think I have made a very important discovery in the theory of the movement of celestial bodies, especially comets. The work is theoretical—I am drafting a summary which I shall submit to our maths professor in a few days."

And in the next letter, he said: "Now that the law has been proved and it only remains to be dressed in beautiful language, I am not a bit nervous, partly, I shall not conceal it, because I am amazed, even dumbfounded, by its universality, which, at first, I did not realize.... I have grown older, calmer, and have come to understand with my whole being and not only with my mind that two minutes are not enough to do a job that would make the world happy, that everything needs time."

After receiving his doctor's degree, Lebedev attended scientific conferences at which he read a paper on the researches he was planning to conduct. This paper was mainly concerned with the programme of investigations that he outlined in Germany and dreamed of carrying out at home.

Lebedev left Germany with this dream. The mood with which he returned to Moscow is shown in one of his letters to his mother:

"I remember how ten years ago Beknev, blinking and screwing up his eyes, explained what a Leyden jar was; how I was allured and attracted by the imposing harmony prevailing in nature; I remember how I secluded myself from the cares of the world and what emotion I experienced when I philosophized with Sasha Eichenwald (the future eminent Russian physicist—*V. D.*) at Kuntsevo: marvellous shapes loomed vaguely behind a poetical rosy haze of mystery. That haze has now dispersed and I have seen the strict, eternal beauty of the world; in it and for it there are purpose, meaning, joy, life.

"If I were to be offered the choice between the wealth of an Indian potentate, with the condition that I quit science and do as I please, and a meagre living and an uncomfortable flat but with a superb institute at my disposal, I would not waver a single moment."

In 1891, his mind full of plans, Lebedev returned home after an absence of four years.

BACK IN MOSCOW

The young scientist found Moscow inhospitable. It lacked what he wanted most—a laboratory for precise, far-going physical investigation.

It must be remembered that at the time there were no special physical research laboratories in Russia.

But that did not disconcert Lebedev. He at once started to look for an opportunity to continue his experiments, receiving considerable help from Alexander Stoletov, an outstanding Russian physicist, who was a professor at Moscow University. Stoletov organized a physical laboratory in which the students of the University did their practical work (in those days laboratory work was just being introduced into the curricula). By then Stoletov had already completed his famous researches into actino-electric phenomena[1] that brought him world-wide renown. A scholar and patriot, he was the leading Russian physicist of his day and devoted much of his time and energy to training Russian scientists. When Stoletov learned of Lebedev's arrival and of his passion for research, he offered him the position of junior in-

[1] Today they are called photoelectric phenomena.—*V.D.*

structor at the University's physical laboratory. Lebedev joyfully accepted the offer. The two men instantly became friends and, subsequently, after Stoletov's death, Lebedev frequently spoke of him with gratitude as of a remarkable scientist and man.

At Moscow University the conditions for research work were extremely unfavourable. The physical laboratory of those days was very unattractive. The premises were not adapted for scientific work. There was no library at hand. "The public education authorities did not arrange to have even a small library at the physical laboratory," Lebedev wrote indignantly.

The means allocated for the organization and conduct of scientific investigations were ridiculously inadequate. To illustrate this sorry page in the history of the oldest Russian university, we shall cite but one example. A born physicist and experimenter, Lebedev could not imagine a laboratory without a mechanical workshop and he immediately set out to arrange for one. For a start, he drew up an estimate of the cost of various mechanical instruments and a lathe; this amounted to only 300 rubles. Professor A. P. Sokolov, who headed the laboratory, was shocked at this "colossal" sum, for where it concerned research the tsarist ministers and all sorts of trustees trained him to think in terms of tiny sums of money.

The people who held the purse strings could not understand why a lathe was needed in a physical laboratory. And in order to get one, Lebedev had, as he later laughingly told his pupils, to present the University board with a bill in which the lathe figured under the name of a "precision Drehebank" (the German word for a lathe). The incomprehensible, foreign word had the desired effect and the scientist got his "Drehebank."

The young scientist energetically introduced improvements and soon created the necessary conditions for experimentation.

After getting the equipment for the laboratory, Lebedev immersed himself in research. At the same time, he became very active in other spheres, sharing in the work of scientific societies in Moscow. At the Society of Natural History, Anthropology and Ethnography, he gave a series of popular lectures on the latest achievements in physics.

But let us return to our principal question of how the young scientist carried out his programme of research.

ACTION OF WAVES ON RESONATORS

> "The history of Russian science shows that a trait of its giants and geniuses was to treat problems and results with especial breadth, which was, however, bound up with an amazingly solid foundation and reality as well as simplicity in the approach to solutions."
>
> (*S. I. Vavilov.*)

While theoretically expounding the problem of the repulsive force of radiating bodies, Lebedev realized that in order to pass from the size of dust particles to the size of molecules he would require new notions about the properties of molecules. A molecule is not a ball, but an intricate structure; its interaction with the electromagnetic wave gives rise to many natural phenomena. And the young scientist set himself the problem of studying the character of this interaction.

Lebedev began this extraordinarily complex task with a series of remarkable investigations into the mechanical or ponderomotive action of waves on resonators—models of molecules.

In order to explain the idea behind these investigations, we shall resort to the modern concept of the structure of molecules. It is, of course, impossible directly to observe the interaction of light waves and molecules. These processes take place with tremendous speed and are hidden far

beyond the limits of our direct perception. No magnifying apparatus can be of help here. Gas molecules move with a speed of hundreds of metres per second, while the speed with which electromagnetic waves are diffused is 300,000 km. per second. Molecules consist of atoms; the latter are complex systems made up of nuclei surrounded by electrons that move at stupendous speeds. An atom is infinitesimally small. Its radius is about 10^{-8} cm. Obviously, some auxiliary means were needed in order to study the interaction of light waves and molecules.

Our possibilities of cognizing nature are unlimited, and it is only natural that scientists found such means. Models came to the assistance of the investigator. It proved possible to build a model of a molecule whose behaviour would reflect certain properties of real molecules. Models frequently help us to reproduce many invisible phenomena and thus study them and verify the results in practice.

Practice tests the accuracy of our knowledge and shows that frequently models produce exact data on the processes taking place in nature.

It is no easy task to make a model and this is particularly true of models which help to study electromagnetic phenomena. Suffice it to point out that simultaneously with Lebedev, some of the most famous experimenters in Europe attempted to study the interaction between electromagnetic waves and molecule models and that none of their attempts was successful. The difficulties facing experimenters in this unknown sphere of physical phenomena were too great.

Lebedev, meanwhile, tackled the problem with astonishing skill. He managed to design and construct models of real molecules which allowed him to study the laws governing their interaction with electromagnetic waves.

In order to understand how that was done, it is first necessary to become acquainted with some of the properties of the so-called oscillatory circuit.

If we charge a condenser and then connect its plates with a spiral wire, we will get a system called an oscillatory

circuit in which electromagnetic waves will be generated and diffused into space. The length of these waves depends on the capacity of the condenser (determined by the distance between the plates and their area) and on self-induction of the wire connecting the plates (determined by the number and size of the turns). In other words, the oscillation in our

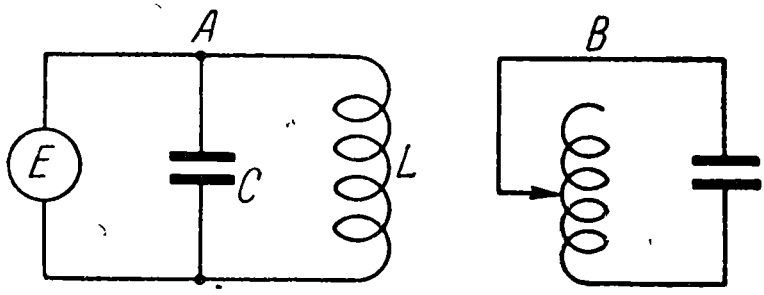

Fig. 9

circuit takes place with a definite frequency, called the frequency of the oscillatory circuit. The electromagnetic waves radiated by the circuit (or vibrator) produce an oscillation in the electric current in the other, receiving circuit. This oscillation will be greatest when its frequency is equal to the frequency of the electromagnetic waves radiated by the vibrator. When that happens, it is said that a state of resonance has set in. The circuit is adjusted by changing the capacity of the condenser (changing the distance between the plates) or changing the self-induction (the number of turns in the coil). Fig. 9 shows two oscillatory circuits: circuit *A* with self-induction *L* and condenser *C* produces oscillations (*E* is the source of electric energy); circuit *B* catches them, being adjusted in resonance by changes in self-induction.

It turns out that a real molecule may be likened to an oscillatory circuit that is able to "receive" very high-frequency (short) electromagnetic waves and, in its turn, radiate similar waves. Such an analogy is still rough, but, nevertheless, it reflects definite properties of the molecule.

Lebedev began his investigations by building models which reflected properties of molecule matter (how he did it will be described below). Instead of light waves, he used electromagnetic waves with a length of several hundred centimetres. In this way, the system of "source of light and a molecule" was replaced by a system of "source—vibrator of metre electromagnetic waves and a model of a molecule

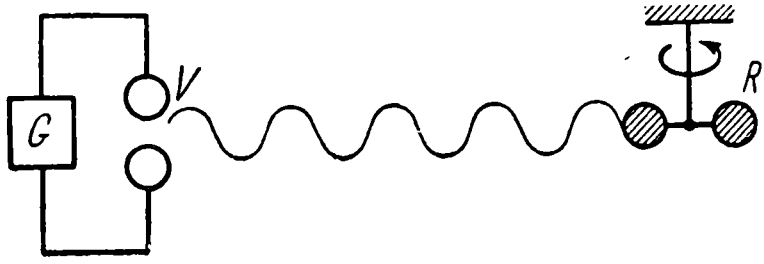

Fig. 10

in the shape of a big resonator." Now we shall describe how he proceeded with his investigations into the interaction of electromagnetic waves and resonators.

In these experiments, the arrangement of the apparatuses was as follows (fig. 10): a vibrator (*V*), specially constructed by Lebedev, in which electromagnetic oscillations were produced by a generator (*G*), radiated 300-400 cm.-long waves (the wave-length was measured by an ingeniously constructed wave-meter). An extraordinarily light resonator (*R*), its construction will be dealt with later, was suspended close to the vibrator from a very thin glass thread.

The following took place in the experiment: as soon as the vibrator (*V*) was switched on and the radiation of electromagnetic waves thus begun, the resonator (*R*) instantly reacted by revolving round the thread it was suspended from. Consequently, during the generation of electromagnetic oscillations in the vibrator (circuit), the resonator was influenced by a certain mechanical force. The electromagnetic waves pushed the resonator, as it were. The mechanical force of the electromagnetic waves may be gauged from the

size of the angle of torsion on the thread. The angle of torsion, which in experiments of this kind is, as a rule, very small, is usually determined by the deviation of a ray of light from a tiny mirror fixed to the thread of the apparatus.

The mechanical force with which electromagnetic waves act on a resonator is exceedingly small and in order to make the resonator sensitive to these gentle "pushes," it has to be as light as possible.

Besides, the resonator must have a device enabling it to change the frequency of its own oscillations. This is necessary so that the resonator could better respond to the electromagnetic waves passing through it. The latter is achieved in the state of resonance. A similar phenomenon is observed during the tuning in of a wireless set (which, essentially, is an intricate resonator) to a given wave-length.

Thus, a resonator must be very light and yet have quite a complex mechanism. It seems incredible that it is possible to make an instrument weighing less than a gramme. But Lebedev managed it. One of his resonators is shown on fig. 11. Here S is a spiral of thin silver wire fixed to a sheet of paper (P). C_1 and C_2 are the plates of the condenser; they consist of separate strips of metal (2 mm. wide and 0.01 mm. thick) stretched on glass frames F_1 and F_2. This resonator was adjusted by cutting and resoldering the turns of wire in the upper part of the solenoid; as a result the self-induction and, together with it, the frequency of the resonator's own oscillations either increased or decreased. The total weight of this apparatus was 0.8 gramme!

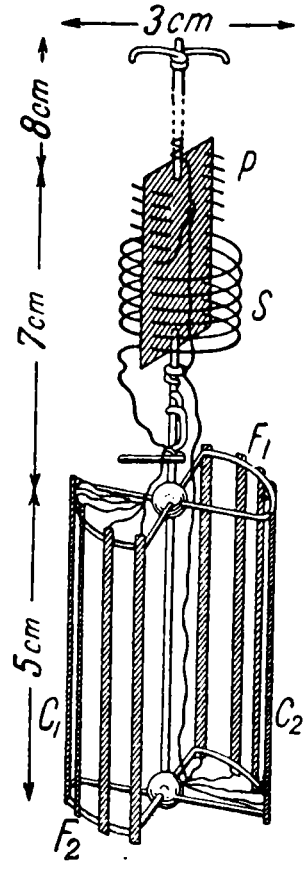

Fig. 11

The main conclusion drawn by Lebedev from these experiments was that if the resonator's frequency is greater than that of the vibrator, the resonator is attracted to the vibrator, and vice versa. The highest values of these opposing forces are observed in the direct proximity of the resonance.

Lebedev's law of interaction between electromagnetic waves and resonators was of very great importance. We know that so-called molecular forces are active between the molecules of matter. What is the nature of these forces? In a work entitled *Experimental Research Into the Ponderomotive Action of Waves on Resonators,* Lebedev wrote: "The cardinal point of the investigations into the ponderomotive action of wave-like movements is the possibility, in principle, of applying the detected laws to the sphere of light and heat radiation of separate molecules and of calculating in advance the resulting inter-molecular forces and their magnitude."

Lebedev reasoned in the following way. It has been established that the nature of light is electromagnetic; therefore, molecules radiate electromagnetic waves. A wave radiated by a certain molecule will call forth an oscillation of charges in any other molecule, i. e., any other molecule will respond (resonate) to this radiation. If it is surmised that the law Lebedev established in his experiments with long electromagnetic waves and macroscopic resonators is applicable in the case of the molecule as well, the following picture may be expected: a radiating molecule (A) will attract a resonating molecule (B) if the frequency of B's oscillation is higher than A's; conversely, if resonator B has a lower frequency it will be repulsed by vibrator A.

But there are very many molecules; each radiates electromagnetic waves and also resonates to the radiation of all the other molecules. As a result, a definite force of interaction establishes itself under the influence of mutual radiation between molecules. This comprised the essence of the idea, which, together with the effort to prove experimentally

that light exerts pressure on gases as well as the hypothesis explaining the behaviour of comets' tails, formed the basis for the researches into the action of waves on resonators.

Simultaneously with Lebedev, this idea was theoretically developed by Academician Boris Golitsyn (1862-1916). Their work marked an important stage in the development of the concepts about the nature of inter-molecular forces and won universal recognition.

While engaged in research, Lebedev always sought to look far ahead, to outline the prospects of physical theory. In the above-mentioned work, he wrote:

"A wide field lies before us—that of studying more complex problems on the basis of the results already obtained and, through direct experiment, verifying our ideas or investigating new and perhaps unexpected features of the ponderomotive forces that we are interested in; by carefully and confidently moving along this path, we can also prepare the ground for the solution of our main problem: by using the data of a spectral analysis, to calculate the absolute magnitude of the forces of interaction between the molecules of some body, a magnitude which is conditioned by their mutual radiation."

As we shall see, Lebedev set out to resolve this "main problem" fifteen years later, when he was already the head of a big group of scientists—the first school of Russian physicists. Unfortunately, his untimely death prevented him from carrying out this task.

It should be stressed that Lebedev fully realized that the law governing the interaction between electromagnetic waves and resonators cannot be applied mechanically to phenomena of the microworld. He held that there were no grounds for identifying real molecules with models. He endeavoured to establish laws which would reflect the interaction between waves and resonators of any physical nature and be common for all oscillatory processes. In this he was guided by the following idea: "By transferring research to oscillations of different physical nature and finding the bond

between the laws governing their ponderomotive action on resonators, *we shall thereby extend the applicability of the discovered laws even to cases in which both the mechanism of the oscillation itself and the mechanism of the resonator receiving it may remain unknown"* (our italics—*V. D.*).

We know that there are waves whose physical natures are different. We can start a wave-like movement in a solid

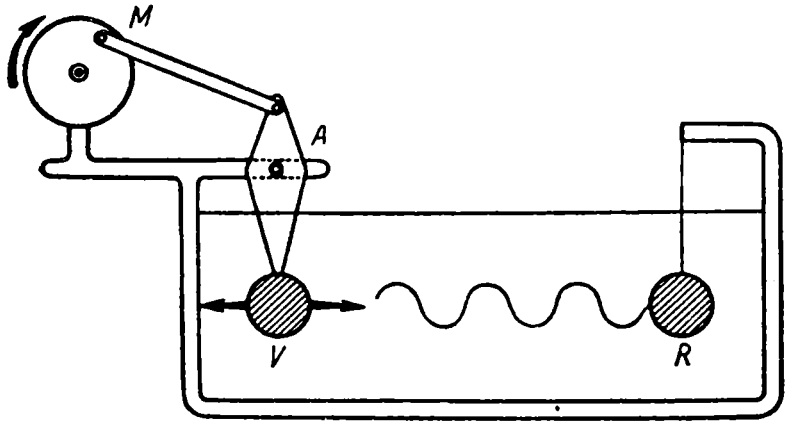

Fig. 12

body (waves of elastic deformation) by striking, for instance, an anvil with a hammer; in water (hydrodynamic waves) —by means of a depth charge; in gas (sound waves)—with the help of any source of sound; and, finally, in space, where there is no matter, in so-called ether (electromagnetic or light waves)—with special radiators.

Lebedev worked on the far-reaching task of elucidating the way waves with different physical natures act on resonators so that the resulting common laws could be justifiably applied to the microworld and to the interaction between invisible molecules and electromagnetic waves.

After studying the action of electromagnetic waves on resonators, Lebedev began similar experiments with hydrodynamic resonators. The following is a brief description of these experiments (fig. 12).

Two metal balls (*V* and *R*) were immersed in a vessel containing water. *V* was the wave-generator in the water.

It was attached to a lever mechanism (*A*) that was connected to an electric motor (*M*). As the pulley of the motor rotated, *V* oscillated in the direction indicated by the arrows. These oscillations produced waves in the water and their length corresponded to the speed the pulley rotated with. The mechanical resonator (*R*) consisted of a metal ball with a flat steel spring attached to it. Acting on this resonator, the water waves exerted corresponding mechanical influences on it: they either attracted or repulsed it, this being recorded by a special gadget.

As a result of these experiments, Lebedev established the highly important fact that the laws governing hydrodynamic resonators are identical with the laws that were previously determined for electromagnetic resonators, namely: when a resonator is adjusted higher, i.e., when the frequency of its own oscillations surpasses the frequency of the vibrator's oscillations, the phenomenon of attraction is observed; when it is adjusted lower—the reverse takes place. These opposing forces are the greatest in direct proximity to the resonance and continuously exceed each other.

When Lebedev finished his research into the interaction between electromagnetic and hydrodynamic waves and resonators, he passed on to a study of the mechanical (ponderomotive) action of sound oscillations on corresponding resonators.

In these experiments he used a so-called Kundt tube (fig. 13) as his source of sound waves. The waves were started by rubbing the right end of a glass rod (*V*) with a moist woollen cloth. As the rod was rubbed it alternately extended and contracted, thus producing oscillations: a wave of elastic deformation spread along the rod. A disk (*D*) was attached to the end of the rod (*V*). The wave of elastic deformation gave rise to oscillations in the disk. These oscillations were transmitted to the column of air in the tube and intense sound waves began to issue out of its open end.

Near the open end, Lebedev placed an acoustical resonator (*R*), which deflected under the action of the sound waves

radiated by the tube (A). This deflection was registered by a very sensitive apparatus. One of the acoustical resonators that Lebedev used in these experiments is shown on fig. 14. It was a thin-walled glass tube that was closed at one end

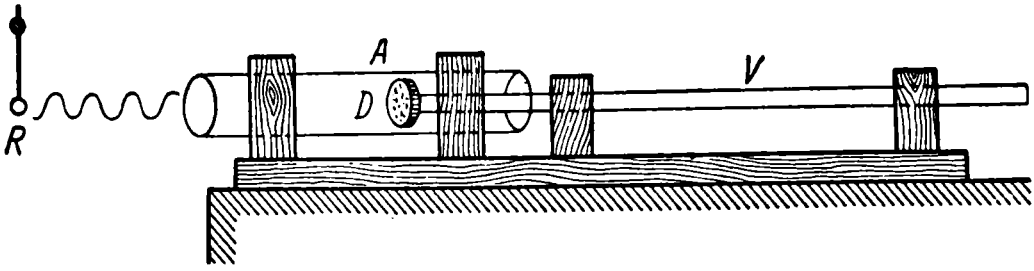

Fig. 13

with a cork (C). A little cork piston (P) could be moved up and down the tube, changing the length of the air column. When this length was equal to a whole number of half-periods of sound waves emitted by tube A, the resonator was considered adjusted and its attraction or repulsion was at its height.

These experiments took more than five years of persistent and painstaking labour. The results were of great importance to science. It was shown for the first time that oscillatory processes of different physical natures (electromagnetic, hydrodynamic, and acoustic) were linked by common laws which do not depend on the physical nature of given oscillations or on the resonators receiving them. It must be noted that this deduction was a confirmation of the dialectical and materialistic world outlook, since it indicated the existence of a mutual bond between various natural phenomena.

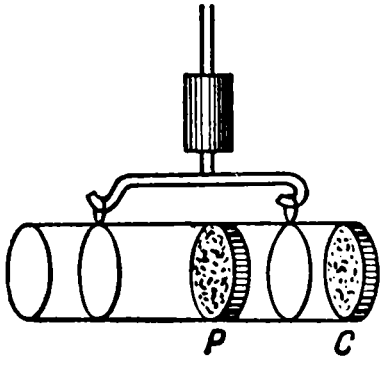

Fig. 14

This series of experiments led to a remarkable conclusion that

served as a transitional link towards further investigations. While studying acoustical resonators, Lebedev discovered the peculiarity that in direct proximity to its source a sound wave acts on the resonator under the same laws that govern an electromagnetic or hydrodynamic wave. Meanwhile, when the acoustical resonator was at a sufficiently long distance away from the source, it experienced only repulsion no matter what the correlation of frequencies was.

As regards the interaction between electromagnetic waves and resonators, it was impossible to unveil such a law experimentally on account of the fact that the mechanical action of electromagnetic waves diminished rapidly when the source was moved away so that at a sufficiently great distance from it the resonator "refused" to feel the waves radiated by the source. Lebedev was therefore compelled to place the resonator close to the vibrator. But he theoretically proved that the experimentally discovered law governing acoustical resonators must apply to electromagnetic waves as well.

This conclusion was of great moment in corroborating the theory Lebedev had developed on the formation and behaviour of comets' tails. Indeed, the Sun is a mighty radiator of electromagnetic waves, while a molecule may be compared with a resonator. In the case of a particle of a comet's tail, it is clear that the Sun and the particle make up a system consisting of a radiator and a resonator located at a great distance from each other. Here, theory and, indirectly, experimentation with acoustical resonators established the predominant action of the electromagnetic waves' force of repulsion. Still, all this did not conclusively solve the problem. That could only be done through an experiment which would give an opportunity of directly observing the pressure of light on molecules.

On the basis of his experiments into the action of waves on resonators, Lebedev offered the following conjecture:

"In nature such a phenomenon (*in a more complex form*) is a repulsive action of the Sun's rays on the gas molecules in the tails of comets" (our italics—*V. D.*). Later, Lebedev brilliantly proved this contention.

His research into the action of waves on resonators was of great scientific importance and soon became known to scholars the world over.

This work brought him well-earned fame; on the application of the Department of Physics and Mathematics at Moscow University he received the degree of doctor without preliminary examinations or submitting his dissertation.

STUDYING THE PROPERTIES OF ELECTROMAGNETIC WAVES

The interaction between the rays of the Sun and the particles of a comet's tail is a case of the action of very short electromagnetic waves on molecules. Lebedev set out to reproduce this phenomenon under laboratory conditions not on models but by directing rays of light to real gas molecules. Before starting these experiments he studied the properties of electromagnetic waves, reassured himself that Maxwell's electromagnetic theory of light was correct and proved by experiment that the only difference between light and electromagnetic waves is in their length.

Hertz had already proved the community of the properties of electromagnetic waves with the properties of light rays. But he conducted his experiments with waves that were scores of centimetres long. But to further consolidate Maxwell's theory it was important to prove experimentally that it is possible to obtain electromagnetic waves of a length that approximates the visible part of a spectrum (about 0.0001-0.0005 mm.) and that in all physical phenomena electromagnetic waves likewise behave exactly as light rays.

At the time, experiments of this kind attracted especial interest. The electromagnetic theory of light was a young theory and was still far from being recognized by all scientists. For example, even such a prominent physicist as

William Thomson adhered to the old views and opposed the electromagnetic theory of light.

It should be noted that the electromagnetic theory was considerably strengthened and developed by the works of many Russian scientists. We have already mentioned A. G. Stoletov, P. A. Zilov, R. A. Kolli and N. N. Shiller, whose experiments gave the theory of the electromagnetic field its first foundation stone. The lead of these Russian physicists was followed by D. A. Goldgammer, who studied the electromagnetic theory of light; in particular, he was the first to offer a firm conclusion on the formula of light pressure. A. I. Sadovsky was the first to prove that light can not only exert pressure but can also cause objects to rotate (this takes place, for example, when light waves pass through biaxial crystals). Alexander Popov was the first to use electromagnetic waves for wireless communication, thus opening the broadest opportunity for the technical utilization of electromagnetic phenomena. Further, the experiments of A. A. Eichenwald consolidated the most essential point of Maxwell's theory—the hypothesis on the existence of the so-called displacement current.

Finally, a series of researches of fundamental importance were carried out by Lebedev. These will be dealt with in detail below.

Lebedev energetically went ahead with his experiments on the properties of electromagnetic waves. He constructed a vibrator which radiated waves that were only a few millimetres long.

The vibrator, with whose help Lebedev obtained millimetre-long electromagnetic waves, is shown on fig. 15. Here I is the source from which an electric current was fed with short impulses to wires W_1 and W_2 that were soldered in little glass vessels (G_1 and G_2). Platinum cylinders (P_1 and P_2) were soldered into the ends of these vessels.

When the inductor (I) was turned on, electric sparks flashed between the ends of the wires and cylinders and then between the cylinders themselves (the electric current made

its way across all the gaps). At the same time, electric current oscillations arose in the vibrator and it radiated very short electromagnetic waves. Lebedev managed to reduce the length of these waves to three millimetres. It must be remembered that the shortest waves Hertz experimented with were about 60 cm. long. This prevented scientists from proving the ability of waves to behave as light waves in a remarkable physical phenomenon—the double refraction of light in crystals. The essence of this phenomenon is in the following.

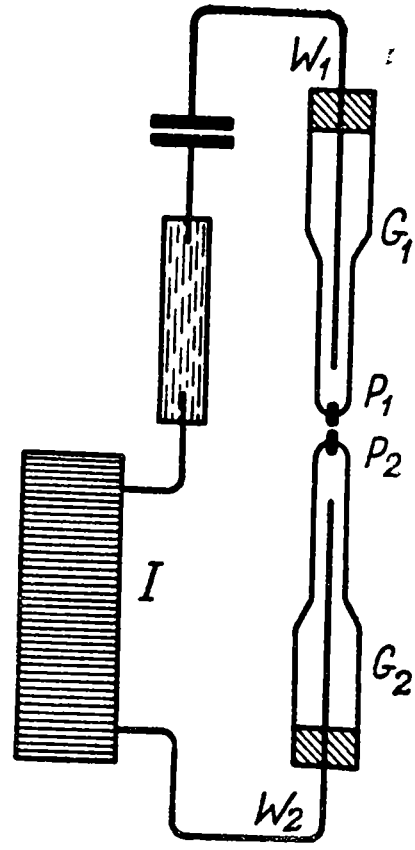

Fig. 15

Let us take a piece of glass and a piece of calcite (also known as limespar) and place them on a sheet of paper with writing on it. There will be two pairs of letters under the calcite (fig. 16), while the glass will show nothing of the sort. This duplication of the letters, which is observed through the calcite, takes place because calcite possesses the property of dual refraction; many other substances, quartz, for instance, have this property to one degree or another. A ray of light bifurcates (fig. 17) after passing through dual refracting material; the result is that two separate images of one and the same object form on the retina of our eye.

The phenomenon of dual refraction was known for a very long time. Naturally, when the electromagnetic theory was put forward the necessity arose of elucidating whether electromagnetic waves experience the same dual refraction in the corresponding crystals. If they did that would fully prove

the identity between light and electromagnetic waves. It must be borne in mind that prior to this Hertz showed that electromagnetic waves reflect, refract and interfere and become polarized under the same laws that govern light waves.

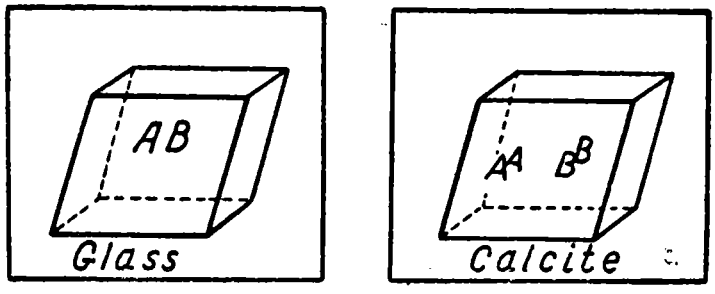

Fig. 16

In practice, it was impossible to carry out the above experiment with 60-cm.-long waves because the prism through which the test electromagnetic wave had to pass had to be longer than the wave, i.e., its sides had to be more than a metre long. The millimetre-long waves obtained by Lebedev made the problem soluble since now only 1-2-cm. prisms were needed.

Before starting to experiment with dual-refracting electromagnetic waves it was necessary to select material that would suit the purpose. After numerous experiments it was established that crystals of natural rhombic sulphur were the most suitable material for dual-refracting prisms.

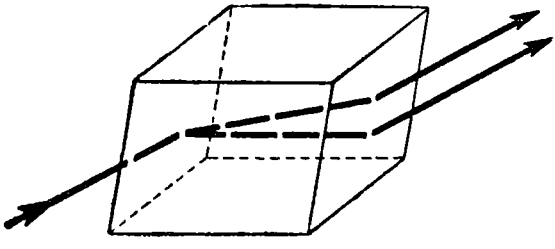

Fig. 17

After making the necessary apparatuses, Lebedev investigated the properties of millimetre-long electromagnetic waves. During these experiments, the vibrator was in the focus of a metal semicylindrical mirror. The radiated waves were reflected by this

Fig. 18. These are the instruments Lebedev used to verify Hertz's experiments

mirror and directed to another mirror in whose focus were two resonators, which reacted to the presence of electromagnetic oscillations in various points in space. By placing a dual-refracting prism between these mirrors, it was possible to show that like the rays of light, electromagnetic waves are dual-refracting.

Lebedev also investigated other properties of these ultrashort electromagnetic waves such as reflection, refraction, interference, and so forth, and found that the properties of millimetre-long waves, like the waves experimented with by Hertz, were identical with the properties of light rays. Maxwell's theory was thus provided with further important substantiation.

These experiments showed that in obtaining ever shorter electromagnetic waves it is possible to approach infra-red rays which coincide directly with light rays.

Russian physicists did much to fill in the white spot in the scale of electromagnetic waves. The gap between the ultrashort electromagnetic waves obtained by Lebedev and infrared waves was studied by the Soviet physicists A. A. Glagoleva-Arkadyeva and M. A. Levitskaya.

All the instruments Lebedev used for these investigations could be carried in the pocket of a jacket. They were frequently exhibited to scientists and the broad public and invariably evoked amazement and delight. A set of these wonderful instruments is shown in fig. 18.[1] These instruments, though they look quite simple, enabled the skilled experimenter to bare the innermost peculiarities of the electromagnetic mechanism.

---

[1] The instruments mentioned here are preserved at the Department of Physics of Moscow University.—*V.D.*

PRESSURE OF LIGHT ON SOLID BODIES

> "A distinguishing feature of Lebedev's experiments was that they were conducted in a sphere of nature which is beyond the reach of the ordinary experimenter."
>
> (*N. A. Umov.*)

The researches into the mechanical action of waves on resonators and into the properties of millimetre-long electromagnetic waves marked the end of Lebedev's period of preparation for the solution of the major problem in his programme of scientific work—that of elucidating under laboratory conditions whether light exerts pressure directly on gas molecules. In order to reach his goal, Lebedev had to traverse a long, difficult but glorious path.

Before tackling this complicated problem, he turned to the simpler task of experimentally proving that light exerts pressure on solid bodies.

The problem of light pressure has an interesting history. In the 18th century, the long-drawn-out struggle between the supporters of the wave and corpuscular concepts on the nature of light ended in a victory for the latter. The corpuscular hypothesis maintained that light is a stream of tiny particles of matter which is emitted at a tremendous speed by any heated surface. This made the idea that light exerts pressure quite natural: any obstacle in the path of a stream of light corpuscles absorbs a part of the latter's motion, in consequence of which it experiences pressure.

The corpuscular hypothesis held out the hope that the problem of the pressure of light would be solved simply, through experimentation. At the same time, an experiment could elucidate and give concrete shape to the concept about the nature of light. Naturally, the problem attracted outstanding experimenters. Numerous attempts were made to prove the existence of light pressure, but all the experiments undertaken failed to yield the coveted result. The situation grew even more complicated at the beginning of the 19th century, when the experiments of Fresnel and Young led to a rejection of the corpuscular hypothesis and brought about a revival of the notion that light is a wave-like movement in elastic ether. The resultant optics of elastic ether that was built up left no room for light pressure, which was incompatible with the wave concept. Nevertheless, physicists continued in their endeavour to discover the pressure of light, but their efforts were as futile as before.

In 1873, Maxwell published his remarkable *A Treatise on Electricity and Magnetism.* In this work he drew upon the electromagnetic theory of light and arrived at the conclusion that light exerts pressure. He wrote that in a medium in which waves are propagated there is a pressure in the direction normal to the waves, and numerically equal to the energy in unit of volume.

In this form Maxwell intimated that electromagnetic waves exert pressure. More, he made it possible to calculate the magnitude of this pressure. Without drawing any conclusions, the *Treatise* offers a formula giving the magnitude of light pressure p on a completely absorbing surface:

$$p = \frac{E}{c},$$

where E is the quantity of energy contained in the light stream and c—the velocity of light.

Hence, the value of light pressure can be easily calculated. Maxwell wrote that "if in strong sunlight the energy of the light which falls on one square foot is 83.4 foot pounds per

second, the mean energy in one cubic foot of sunlight is about 0.0000000882 of a foot pound, and the mean pressure on a square foot is 0.0000000882 of a pound weight."

What is the mechanism of light pressure on the surface of bodies?

In order to explain this mechanism as clearly as possible we shall draw upon the concepts of the electronic theory that was developed on the basis of Maxwell's theory after the discovery of the electron. Maxwell's theory held that in an electromagnetic wave the electrical and magnetic forces act perpendicularly to each other in the direction of diffusion. Let us suppose that a wave falls from top to bottom on the surface of a flat mirror (fig. 19). The electrical force of the light wave will push the electrons on the surface of the mirror in the direction indicated by the arrow (E) in fig. 19. Thus, there will appear a stream of electrons, or an electric current, which will simultaneously be subject to the action of the magnetic field (N) of the light wave. According to the electronic theory, a magnetic force acts on an electric current in such a way that the direction of this action coincides with the direction in which the light wave diffuses; thus, the magnetic force (N) will press the electrons, as it were, against the mirror, thereby conditioning the mechanical force of the pressure of light on the mirror's surface. Such, in general outline, is the mechanism of light pressure.

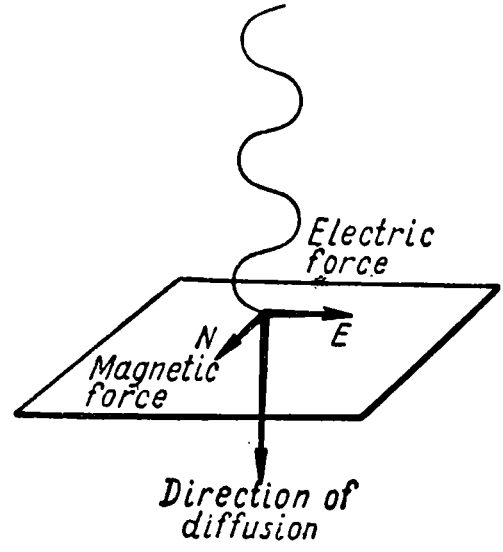

Fig. 19

However, the above concept about the mechanism of light pressure was generally accepted only in the 20th century when universal recogni-

tion was extended to the electronic theory, after Lebedev's experiments. But towards the close of the 19th century many scientists refused to reconcile themselves with the idea that light exerts pressure. The reason was that the notions about the nature of light were vague and that countless experiments conducted by the greatest physicists of the day failed to show the pressure of light.

What prevented scientists from solving such an alluring problem? Why was light pressure so difficult to discover?

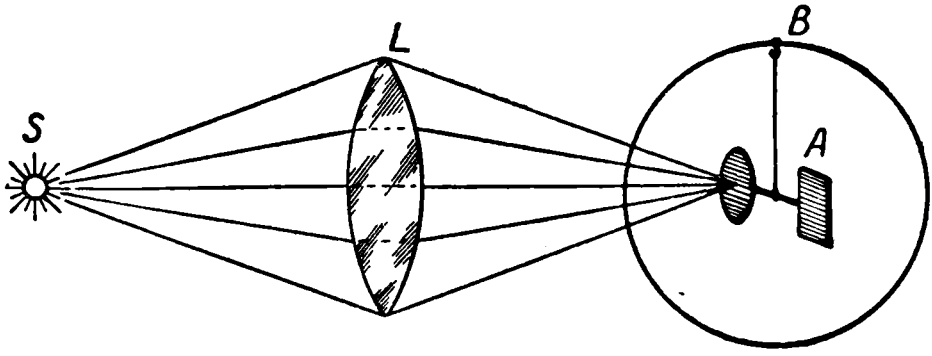

Fig. 20

The first difficulty was that light pressure is infinitesimally small. This is best shown by figures. On a mirror with an area of one square metre, sunlight exerts a pressure of approximately half a milligramme. Therefore, on a square centimetre of surface this pressure will be 10,000 times less! It is hard to find a comparison with which to illustrate such a minute pressure. A mosquito alighting on a mirror will press on it with a greater force than a ray of sunlight.

True, we can increase the pressure by using not sun-rays but light from a very powerful artificial source, a powerful arc lamp, for example. That is exactly what scientists did. But even then light pressure is extremely small. The idea of the experiment itself is simple enough. Let us examine fig. 20.

The light from source S is collected by the lens L and directed towards the wing of a torsion balance A, suspended in a vacuum cylinder B. The torsion balance (A) is a rocker hanging from a thin thread; at one end is a round wing, on which the light falls, and on the other—a counterbalance. The torsion balance rocker turns under the action of light pressure. The angle of torsion reflects the magnitude of this pressure.

This seemingly simple experiment proved very difficult to carry out. Many leading physicists wracked their brains over the problem of building an apparatus that would register the pressure of light. All sorts of cunning devices were invented. Researchers made apparatuses that could register even smaller pressures than those of light and yet they fell short of their goal. Why?

The hindrance was that other, so-called radiometric forces arose when the pressure of light was measured. Let us examine the origin of these forces in greater detail and then go on to see how Lebedev excluded them.

Imagine for a moment that we are looking into the cylinder B through a microscope that allows us to see separate molecules. We must make a reservation here for at the moment we do not have such a microscope. But in the given case the matter concerns phenomena whose mechanism has been studied so thoroughly that we can speak of them as though we had seen it in action with our own eyes. First of all we would have seen air molecules moving chaotically in the cylinder. The reason for all the trouble is that it is very hard to drive air molecules out of a cylinder. Today, we have special vacuum pumps which suck the air out so efficiently that only a small number of molecules remain. For clarity's sake, we shall cite some figures. In every cubic centimetre of air that we inhale there are about 10^{19} molecules. Modern vacuum machines rarefy the air to such an extent that approximately a thousand molecules are left to a cubic centimetre. But when Lebedev started out on his experiments, investigators did not know how to produce such a rare

atmosphere, or, properly speaking, such a high vacuum. With the help of various kinds of cleverly-contrived devices, Lebedev managed to produce the highest vacuum for his day —about 0.001 mm. of mercury column. That means that there were 10,000,000 million molecules to every cubic centimetre of air in the cylinder *B*! These were the culprits that prevented light pressure from being measured.

Let us see how they did it. When light falls on gas, the latter is warmed. When gas molecules are heated they move faster. Now let us see what happens to the wing of a torsion balance when a ray of light falls on it. The moment the source of light is turned off, the air molecules that were moving chaotically about the cylinder will bombard the wing from all sides with one and the same force. As the molecules rebound from the wing like elastic balls, they push it on the right and left sides with uniform pressure. When the source of light is turned on the surface facing it grows warmer, and the molecules, in bumping against the heated surface begin to rebound with greater energy and, in their turn, to push the wing with greater force (phenomenon of recoil). Thus, the forces pushing on the left side will surpass the forces pushing on the right, cooler side. Under the action of these so-called radiometric forces, the wing of the torsion balance will deflect towards the same side that it must deflect under the action of light pressure. However, since radiometric forces are a thousand times stronger than the force of light pressure, it is naturally impossible under these conditions to determine whether this phenomenon is caused by the pressure of light or by the radiometric forces. But that is only half the trouble. The gas molecules in the cylinder are the cause of yet another worry.

When gas is heated ununiformly, so-called convection currents begin to form in it. In the experiment we are examining, the heating was not uniform. On the left side of the wing that was warmed by light rays, the temperature was higher than on the right side, which was in the shade. This led to the formation of a gas current which moved

from the cold to the hot side. The interaction between such a gas stream and the wings, which is similar to the interaction between the wind and the vanes of a windmill, causes the wing of a torsion balance to deflect in, what is worst of all, the same direction as in the above-described phenomenon of recoil.

The convection currents and the radiometric forces were what made physicists throw their hands up in despair. The difficulties seemed to be insurmountable. But they did not daunt Lebedev. It was not fortuitous that the great scientist Kliment Timiryazev called him a mighty warrior to whom every obstacle was a challenge. Lebedev tackled the problem boldly and in three years presented science with a marvellous discovery.

How did Lebedev nullify the convectional and radiometric interference and observe the deflection of the wing under the action of only light rays?

It became obvious to him that in order to succeed he would have to reduce the number of molecules around the wing, and he did so by a very original method of "smoking" the molecules out of the vessel. He put a drop of mercury into the cylinder *B* and warmed it lightly, at the same time continuously pumping out the air with the best type of vacuum pump available in his day. The mercury evaporated and its vapours forced out the air which was sucked up by the vacuum pump. After this, the cylinder was cooled until the mercury vapours regained their solid state and settled on the walls (the freezing point of mercury is 38.9°C. below zero). It is worth noting that this idea of Lebedev's anticipated the Langmuir pump which was constructed many years later and played a major role in vacuum engineering—one of the most important branches of modern experimental technique.

Lebedev eliminated the convection currents by a very simple and ingenious method. He forced the ray of one and the same source of light to fall alternately on both sides of

the wing (we shall see later how he did it). It is quite evident that in this case both the right and left sides would have the same temperature conditions and that there would be no convection currents.

After excluding this interference, Lebedev came to grips with the radiometric forces, which appear when any side of the wing is illumined for even a short period. As we have already said, radiometric forces concentrate on bombarding the wing with gas molecules, the bombardment becoming more intense as the temperature rises. A large number of fast-moving molecules accumulate on the illuminated side, making the mirror "recoil." There are two reasons for the appearance of these "dangerous" molecules.

The first is that before the rays of light reach the wing they pass through the wall of the cylinder *B* and heat it, with the result that from this heated spot the molecules rebound with a terrific speed and bombard the wing in the direction taken by the light rays. Lebedev removed this danger easily. He used a cylinder whose radius was sufficiently big to allow the molecules rebounding from the wall to collide with neighbouring molecules and thereby lose their force before hitting the wing. Furthermore, he reduced as far as possible the amount of heat imparted to the walls by the light, achieving this in the following way. The light radiated by any source is not uniform as far as its components are concerned; it contains a wide range of electromagnetic waves of different lengths. Some pass through the glass freely, others are held up, being absorbed by glass molecules and converted into heat. Consequently, not all the components of a ray of light are responsible for heating the walls of a cylinder. Therefore, it is possible to avoid noticeable heating by excluding the "harmful" waves that form part of a ray; by "filtering" a ray and letting through only the "harmless" waves. For this purpose there is the so-called light filter, which is a sort of a sieve that holds up waves of unwanted lengths and lets through only those

that are needed for the given experiment. This was the very method that Lebedev used. After selecting the corresponding light filters, he reduced the heating of the cylinder's walls to a minimum.

Finally, it was necessary to eliminate the second reason for the appearance of "dangerous" molecules. The fact is that the temperature of the illuminated side of the wing is

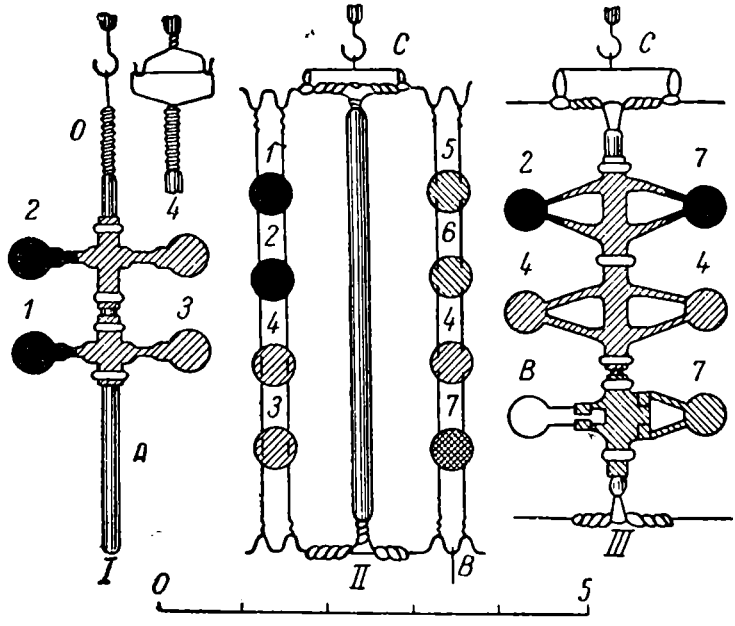

Fig. 21

different from the temperature of the dark side. Lebedev made an ingenious measuring instrument which helped him to take this into account. In his experiments he used wings of different shapes (fig. 21).

Let us examine at least one of them (*I*). It consisted of a glass rod (*A*), to which two little crosses of sheet platinum of different thickness were attached by means of platinum rings. The two right wings (*4* and *3*) had mirror surfaces on both sides; the two others (*1* and *2*) were covered with platinum blacking (finely powdered platinum of a very dark

colour). The diameter of the wings was 0.5 cm., while the whole of this tiny apparatus was 2 cm. wide and about 4 cm. long. It was suspended from a very fine, 30-cm.-long glass thread. A ray of light could be directed to any of the four little wings by turn. The entire apparatus revolved around its axis under the action of light pressure and it was possible to calculate this pressure by the angle of torsion.

One might ask how Lebedev took account of the radiometric forces. The answer is that as a result of numerous experiments, he established that in the case of two wings of the same size and material and whose surfaces have similar properties with regard to electromagnetic waves, radiometric forces increase proportionally to the thickness of the wings. Consequently, the thinner the wings the weaker these forces. But it is impossible to make an infinitely thin wing. That is why Lebedev resorted to the stratagem of making the two top wings of the apparatus considerably thinner than the bottom ones. A ray of light was directed alternately first to a thin wing and then to a thick one. The difference in the angles of torsion showed the magnitude of the radiometric forces and that made it possible to take them into account and exclude them when the intensity of light pressure was calculated.

Now we shall explain why the left wings were blackened and the right ones polished. The theory of optical phenomena prompted the following: light falling on a surface which completely absorbs it (blackened surface) will produce half the pressure it would have produced if it fell on a reflecting surface (mirror). It was necessary to verify this conclusion of the theory. That was precisely why the left wings were blackened and the ones on the right had mirror surfaces. The former absorbed most of the light, while the latter almost completely reflected it.

Apparatuses *II* and *III* (fig. 21) served the same purpose as the apparatus described above, their only difference being in certain elements of their design.

The general arrangement of the apparatuses for measuring the pressure of light on solid bodies is shown on fig. 22.

The source of light was an arc lamp (C). The light rays were collected by lenses (L) and fell on a metal diaphragm (D). They went through an aperture in the diaphragm and were collected by lenses (G) into a parallel beam and passed to a vessel containing clear water (B). The water acted as a light filter; it absorbed the "harmful" rays we spoke of earlier. The "filtered" light moved on in a parallel beam and was reflected by three mirrors (E_1, E_2 and E_3), and focused by a lens (T_1), after which it passed through a glass plate (H_1) and proceeded to a measuring apparatus (K) in a glass cylinder ($Б$).

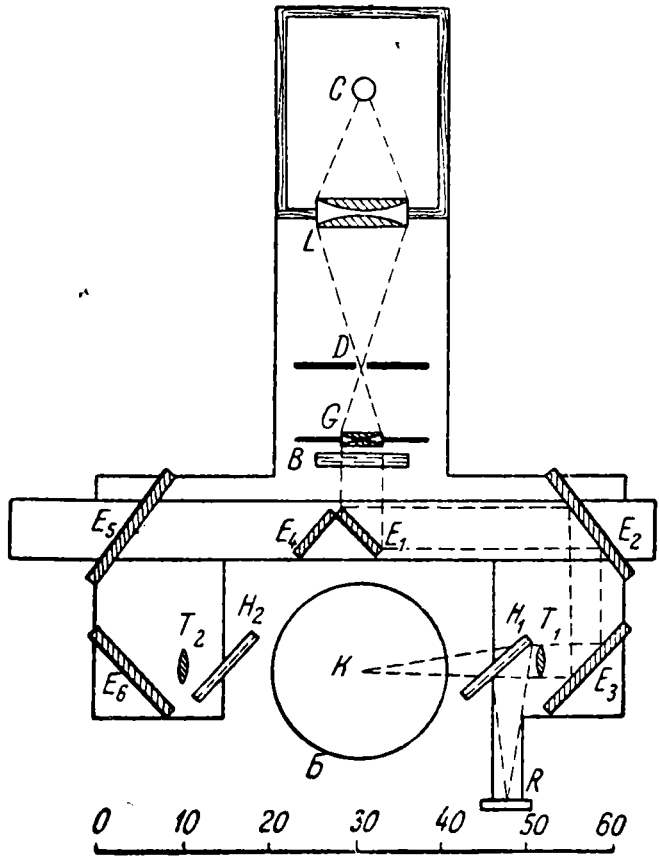

Fig. 22

Mirror E_4 could be shifted to the place of mirror E_1. That made the light pass in a similar manner along the left side of the installation and fall on the measuring apparatus (K) from the opposite side.

If light really pressed on bodies, it was obvious that this pressure must be directly proportional to the energy of the

light rays. Consequently, in order to determine the absolute magnitude of the pressure, it was necessary to know the energy of the rays falling on the measuring apparatus. That was the very purpose served by the plate H_1 (and, corresponding, by H_2). Part of the rays collected by the lens (T_1) were reflected by this plate and directed to a calorimeter (R), which converted light energy into heat energy that was measured with a thermometer.

Lebedev measured the pressure of light emitted by an arc lamp; it was from two to three times brighter than sunlight on the Earth's surface.

Fig. 22 shows only the scheme of the historic experiment. It looks simple. But this simplicity hid a host of difficulties and many truly heroic efforts had to be made before success was achieved. Only a man with an iron will, who had deep confidence in the unlimited scope of the human mind, could surmount an obstacle which scores of renowned scientists found insuperable.

In 1899, for the first time in the history of science, it was discovered that light actually exerts pressure on bodies and the magnitude of this pressure was measured.

Lebedev read the first paper on his experiments at a meeting of the Swiss *Société Vandoise* on May 17, 1899. In the summer of 1900, he reported on the results of his work to the World Congress of Physicists in Paris.

The discovery made a profound impression. At one of the scientific congresses, William Thomson, the well-known physicist, admitted to Kliment Timiryazev: "Perhaps you know that all my life I have been fighting Maxwell, refusing to recognize his light pressure, and now your Lebedev has forced me to surrender in the face of his experiments." The Russian scientist's success was unanimously welcomed by all the noted physicists of the day. F. Paschen wrote to Lebedev.

"I regard your result as one of the most important achievements of physics in recent years.... I appreciate the difficulties you were confronted with, especially as sometime ago I personally had set out to prove the existence

of light pressure and conducted similar experiments, which, however, did not yield a positive result. . . ."

The discovery that light exerts pressure is of great significance. Together with Lebedev's other investigations, this

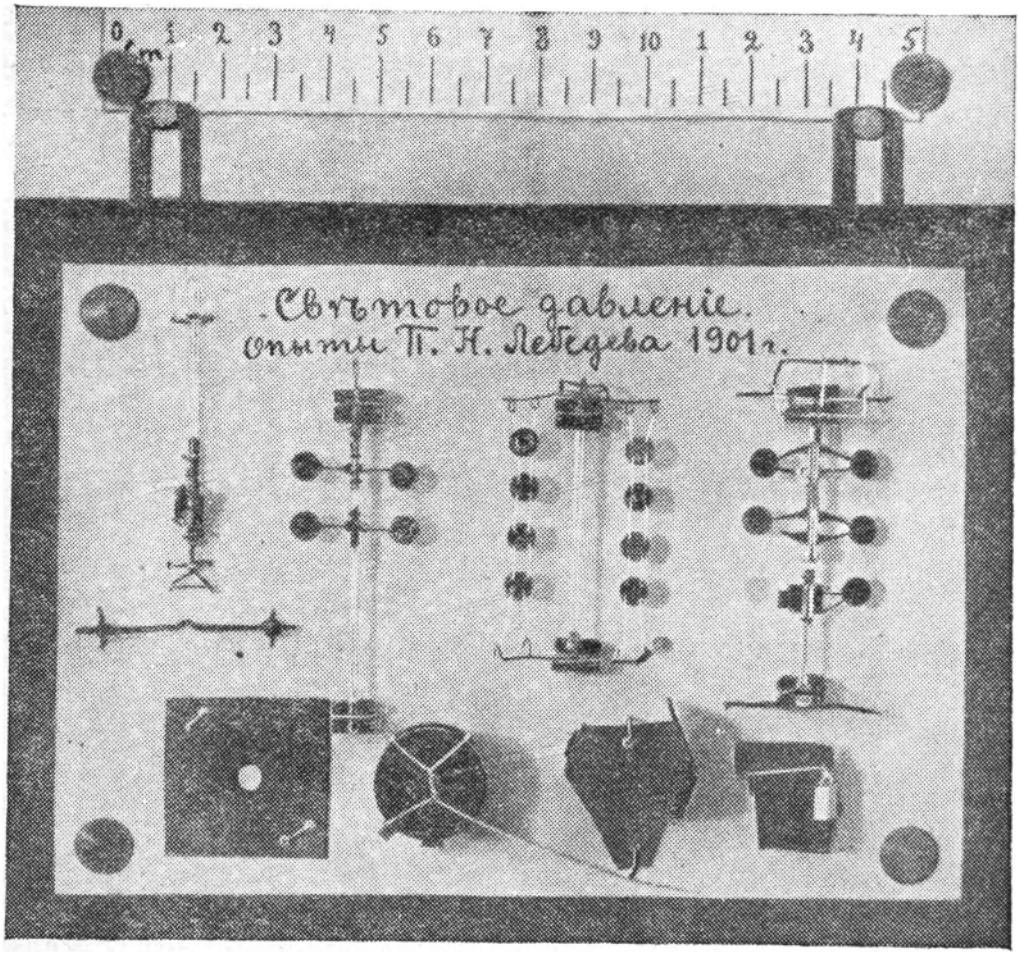

Fig. 23. The apparatuses with which the pressure of light was measured for the first time in history

discovery played a substantial role in consolidating the theory of the electromagnetic field. Side by side with classical mechanics, this physical theory is the foundation of modern engineering. Its ideological importance should also be noted for it holds that though outwardly different, elec-

trical, magnetic and light phenomena are in reality closely interrelated and have identical physical natures. Lebedev's experiments corroborate the theory as well as the fundamental corollary of the dialectic-materialist view on the existence of a bond between natural phenomena.

Of importance is the fact that Lebedev showed for the first time that material bodies of nature and light have a common property, namely, that both possess a mass, which,

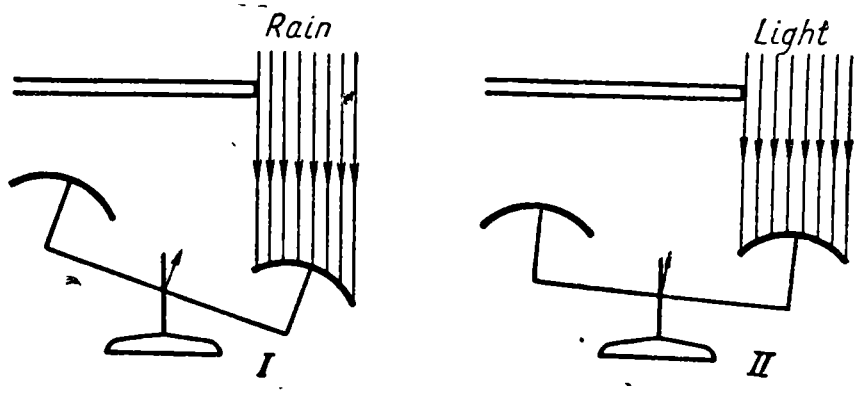

Fig. 24.

though qualitatively different, is similar in action. Although it proved to be "feathery," light nevertheless possesses a certain mass.

An illustration of this will be found in fig. 24, which shows rain falling on scale *I* of a balance and ray of light falling on scale *II*. In both cases, the balance shows a definite deflection from the position of equilibrium. The only difference is in the magnitude of this deflection: in the case of light, it will be insignificant (as we have already seen, balances for "weighing" light are not easy to construct). This analogy between rain and light is rough, but it shows the essence of the matter, namely, that light represents the movement of a definite kind of matter, which is qualitatively different from the substance (water) in the given case but is closely linked with it by a property that is common to both. The thesis of dialectical materialism on the mutual bond between various kinds of matter, which says that in nature

there is no movement without matter, was provided with further emphatic proof in Lebedev's experiments.

Through his experiments, Lebedev contributed greatly towards elucidating the nature of light, which was one of science's cardinal problems. Academician Sergei Vavilov pointed out that Lebedev's discovery "gave the physicist full grounds to regard light as a form of moving matter and that the contrast between light and matter has disappeared for ever in this synthesis."

Lebedev's experiments confirmed the premise of the electromagnetic theory on the correlation between the energy (E) of a falling beam of light (per second per 1 sq. cm. of surface) and the pressure this beam exerts:

$$p = \frac{E}{c}$$

where c is the velocity of light. Supposing light, like matter, has a mass, and designating the mass of light as a unit of volume by μ, we can express the pressure exerted by light in the form: $p = \mu c$. Then $\mu c = \frac{E}{c}$, and we get the formula:

$$E = \mu c^2$$

which is extremely important in modern physics. It shows the bond between energy and mass and is applicable not only to light, but also to matter.

After Lebedev's discovery was made public, the fact that light exerts pressure was widely used by scientists as a basis for new theories in the sphere of cosmic physics. Light pressure plays a very important role as a cosmic factor in modern astrophysics. These concepts form a component part of the cosmogonic theories of V. G. Fesenkov, V. A. Ambartsumyan, O. Y. Schmidt and other Soviet scientists.

The Academy of Sciences of Russia awarded a prize to Lebedev for his work on the pressure of light. In 1900, he was appointed Professor of Physics of Moscow University and a small laboratory was placed at his disposal.

ESTABLISHING A SCHOOL

"How joyful it is to labour for the weal of society!"

(*M. V. Lomonosov.*)

During the period in which Lebedev studied the pressure of light, he began to draw last-year undergraduates into research work. He dreamed of a major scientific school of Russian physicists and of organizing collective scientific research. A true patriot, he was very much disturbed by tsarist Russia's cultural backwardness. When he was compelled to go abroad in order to continue his education he keenly felt the need for Russian scientific-research training centres. He did everything in his power to awaken Russia's scientific minds, to organize them and direct their efforts towards enriching Russian science.

In an article dedicated to the memory of Mikhail Lomonosov, he wrote: "Lomonosov felt and believed

That Platos just as wise,
And Newtons of great enterprise
On Russian soil may be born.

"History showed that he was right: Russia gave birth to Dmitry Mendeleyev, Ilya Mechnikov, Ivan Pavlov and Kliment Timiryazev and, through them, made a large contribution to the treasure-store of human knowledge."

Lebedev passionately sought to found a Russian school in which experts in various fields of physics would be trained. He felt he could establish and head such a school.

We have already mentioned that when the youthful Lebedev went abroad, his mind was filled with so many questions and ideas that he could not concentrate on any one narrow subject. As time passed, the talents of the scientist demanded an ever greater field of action. Back in 1893, he made the following entry in his diary: "The abundance of ideas and plans does not let me work in peace." And he began to surround himself with pupils, to pass on to them his knowledge, to share his ideas with them, and to stimulate their interest in scientific research. Lebedev's prestige as a scientist and teacher rose by leaps and bounds and the number of undergraduates seeking his guidance increased rapidly. He carefully directed their work and in every way encouraged their striving for research. He gave promising students subjects to work on independently and in this manner drew some of them into the circle of his pupils.

All the researches conducted by Lebedev's pupils were directly connected with the problems he was personally interested in. For example, during his investigations into the pressure of light, he was struck by the idea that in a manner analogous to the pressure of electromagnetic waves, sound and water waves exerted pressure on solid bodies. He let his pupils N. A. Kaptsov, V. D. Zernov and V. Y. Altberg prove this hypothesis experimentally.

Kaptsov's researches established that waves diffused in water exert pressure on bodies; he revealed the laws governing this physical phenomenon and measured the magnitude of wave pressure.

Under Lebedev's guidance, Altberg proved that sound waves, too, exert pressure on bodies.

Special mention must be made of the investigations conducted by Zernov, who was entrusted by Lebedev with elaborating a method of measuring the absolute intensity

of sound. The practice of employing various acoustical measurements insistently demanded the settlement of this question. Zernov established that a sound wave revolves a little rectangular mirror with a definite intensity when the latter is suspended at a certain angle to the "sound ray," and showed that such a system could serve as a reliable means of measuring the absolute intensity of sound.[1] Lebedev considerably improved this measuring system. Thus, the joint efforts of teacher and pupil resulted in the creation of the phonometer, an instrument for measuring the intensity of sound. With its help it is possible to compare, for example, the intensity of the sound of a voice and of musical instruments.

Closely allied with these investigations were the important researches of N. P. Neklepayev (who was also Lebedev's pupil) into the absorption in air of the energy of so-called ultrasonic waves (very short sound waves). Moreover, the absorption in air of the energy of sound vibrations with a frequency of about a million cycles per second was discovered and measured for the first time. Today, the use of ultrasonic waves is widespread in engineering.

Lebedev gave another of his pupils—A. R. Kolli (the son of the R. A. Kolli mentioned earlier)—the assignment of investigating the properties of long electromagnetic waves. In studying the behaviour of these waves during their passage through various mediums, Kolli brought to light the so-called anomalous dispersion of certain substances in this field of the spectrum of electromagnetic waves.

T. P. Kravts, another of Lebedev's pupils, was set the task of investigating the absorption of light waves in solutions of coloured matter.

Other pupils of Lebedev's studied infra-red rays; the school's plan of research included investigations into the properties of ultra-violet rays.

---

[1] While measuring the ponderomotive action of sound waves on resonators, Lebedev measured the relative intensities of sounds.—*V.D.*

The researches of V. K. Arkadyev, A. K. Timiryazev, A. B. Mlodzeyevsky, N. K. Shchodro, E. N. Bogoslovsky, N. E. Uspensky, B. F. Rozanov and other members of the close-knit body of scientists were intimately linked with Lebedev's work.

Thus, gradually, was laid the foundation of Russia's first major school of physicists.

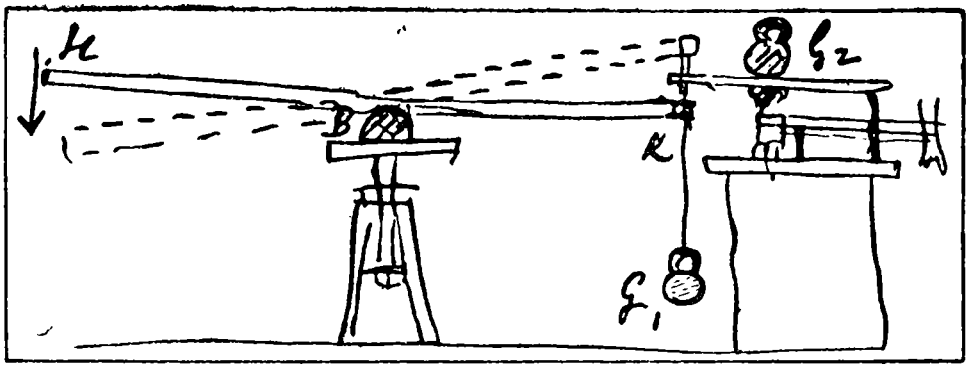

Fig. 25. Drawing by Lebedev

The task Lebedev set himself was not an easy one. There were no conditions in which a school could expand. Handicapped by small premises that were totally unsuited for research work, the school could not develop normally. The government did not allocate any money for the purchase of the necessary laboratory equipment. Most of the experiments of this period were made in a training laboratory, while one of Lebedev's pupils was even forced to do his work in the corridor.

It cost Lebedev much of his time and health to guide the work of his pupils under such difficult conditions. But he was a scientist first and foremost and did not spare himself, often spending the night over his work; too few hours of sleep and overwork were usual occurrences. He paid a high price for his discovery of light pressure. It brought him serious exhaustion and an exacerbation of a dormant heart

disease. An acute heart attack forced him to discontinue his work for some time and go abroad to recuperate.

Half a year later, Lebedev enthusiastically returned to his beloved physical laboratory where a numerous body of pupils was already waiting for him.

Until 1904, Lebedev and his pupils had to carry on in unsuitable premises and without the necessary equipment. But in 1904 a new building was finally erected for the Institute of Physics at Moscow University. In it Lebedev's school was given its long-awaited comfortable premises. Lebedev's personal laboratory with a workshop adjoining it was on the second floor, while his pupils established themselves in the basement. It was christened "Lebedev's cellar" and with it is linked one of the most glorious pages of the history of Russian physics. Lebedev was given a small flat at the institute. That enabled him to go to his laboratory or to the "cellar" at any time of the day or night. In their reminiscenses, Lebedev's pupils relate that he abused this opportunity to the detriment of his health and against his doctor's orders.

However, the school remained materially insecure. Neither the world fame of its head nor the successful researches of his pupils excited the interest of the tsarist officials.

There are many documents showing the conditions in which Lebedev's school carried on at Moscow University. The following is an extract from one of them—a petition sent by Lebedev on May 1, 1904 to the Education Inspector of Moscow:

"When the laboratory was moved from its old, close quarters to the new physical institute, the number of undergraduates engaged in elementary tasks in physics should, undoubtedly, have been increased, since in the old building more than half the applicants had to be refused entry because there was no space. In meeting this urgent demand, Professor in Ordinary A. P. Sokolov will have to make use of the apparatuses that until now he could place at my disposal. He will also have to enlist the services of the workers at

the laboratory in order to prepare for new tasks. Thus, in the circumstances, I shall be deprived of the opportunity of teaching or carrying on my own researches.

"That is why in February of this year I asked the Department of Physics and Mathematics for permission to buy 8,400 rubles' worth of physical instruments that I need for my researches and for the work of my pupils. The department forwarded my application to the Board of Governors of the University; the Board rejected my request.

"At the same meeting of the department I asked for the allocation of 40 rubles as wages for a fitter, for whom there is a constant need in the performance of special researches in physics; the Board refused to allocate the money.

"On April 8 of this year, a meeting was held of the heads of the University's educational and auxiliary institutions at which the money released for equipping the University's new buildings (75,000 rubles) was allotted. I appealed to the meeting with an application for 1,500 rubles for the purchase of laboratory apparatuses. The meeting turned down my request....

"From the aforesaid, it follows that in the physical institute, whose building alone cost more than 450,000 rubles, I, a staff Professor of Physics, do not have the opportunity of reading an obligatory course of experimental physics, conducting studies in the laboratory, or carrying on my own scientific work."

Here was a physicist of world renown, who, without sparing his health, managed to organize a big body of young physicists and launch upon fruitful scientific work on a broad scale and his reward for training urgently needed scientific workers was indifference on the part of the tsarist officials. Russia's ruling circles were not interested in the educational activities of the great scientist and they hindered the development of his school.

But Lebedev stubbornly forged ahead. After the laboratory was moved to "Lebedev's cellar," the number of his pupils doubled, the figure reaching 20. N. A. Kaptsov, who was

one of Lebedev's first pupils, wrote a biographical sketch of his teacher in which he warmly recalled the house-warming of the first school of Russian physicists:

"I distinctly remember Pyotr Nikolayevich, gay, full of spirits, and firmly believing in the success of his school, when he took us to his cellar for the first time in order to show us our work places and rooms. His speech was packed with jokes and praise for the new premises and he spoke in a fascinating way to each of us about our future work. . . ."

The scope of the school's researches broadened. Each of Lebedev's pupils worked on an independent subject, while Lebedev managed simultaneously to guide this extensive work, carry on with his teaching, which was particularly hard for him because of his broken health, and prepare for the solution of a much more difficult experimental problem.

PRESSURE OF LIGHT ON GASES

> "... Lebedev has mastered experimentation to such a degree that scarcely anybody in our day can match him."
>
> *(From a letter by W. Wien to V. A. Mikhelson.)*

For Lebedev, the measurement of light pressure on solid bodies was a step towards the solution of the more complicated problem of unveiling and measuring the pressure of light on gases.

Scientists regarded this problem as insoluble. If, in the case of solid bodies, light exerted a pressure of approximately half a milligramme per square metre, then, according to physical theory, its pressure on gases must be hundreds of times less. It seemed unbelievable that such a tiny force could be measured with physical instruments. Besides, well-known physicists like Sommerfeld and Arrhenius rejected the very thought that light pressed on gases. Things that have become axiomatic in science and which we regard as obvious and usual were only recently subject to doubt.

Meanwhile, Lebedev began his "impracticable" experiment. The measurement of the pressure of light on gases crowned the plan outlined by the scientist in his youth, when he was abroad. He carried the idea of the experiment in his mind for a long time. An entry made in his diary in 1894 enumerates the apparatuses with which the pressure of light on gases could be best investigated, gives detailed descriptions of the possible designs of these apparatuses, and indicates what gases should be selected for the experiments,

the wave-length of the light rays that should be used, and so forth.

He realized that he was facing a fortress which could not be taken at the first direct assault; long and painstaking preparatory work was needed. The numerous preliminary investigations were actually rehearsals. But the day came when finally all the preparations were completed. With the experience of subtle physical researches behind him, Lebedev began to carry out his long-intended experiment.

In order to have even a very general idea of how complex the task was, it is necessary to know the following. In the investigations into the pressure of light on solid bodies, Lebedev's only difficulty was to neutralize the molecules guarding the measuring instruments against the direct action of a ray of light, but here he had to deal with the molecules themselves. He had to harness the chaotically tossing mass of tiny particles and force them to move co-ordinately in the direction of the rays of light and set in motion the instrument that would register this movement.

The idea of the experiment was as simple as that of experimentally proving that light pressed on solid bodies.

Fig. 26 gives a rough diagram of the apparatus that was suggested by Lebedev when he was still abroad. The gas under investigation is in a chamber (A) with windows (V_1 and V_2) and a partition (B). The light coming in through the left part of the chamber presses on every gas molecule; consequently, the whole mass of gas must move in the direction the light is diffused. The light rays will press the gas to the back wall of the chamber, with the result that there will be a concentration of molecules there: the

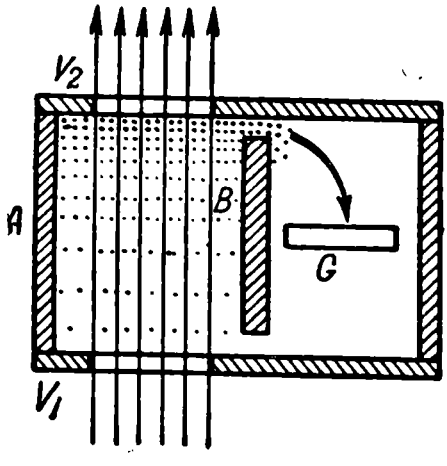

Fig. 26.

gas will be denser than at the front wall. When gas is contained in a vessel it always seeks to distribute itself in a way that there should be an equal number of molecules everywhere and that the pressure on the walls of the vessel should be the same in all directions. However, if there are more molecules at the back of the vessel than at the front, the gas will pass across the partition (*B*) in the direction indicated by the arrow in the drawing and press on the piston of a sensitive instrument (*G*). The intensity of this pressure must be proportional to the force of the pressure of light.

The idea is very simple, but we shall see later how many difficulties this simplicity hides. The struggle against them required exhausting labour and many sleepless nights, and yet the first experiments came to nothing. The tremendous physical and mental strain told on the scientist's weak health: reduced to a state of collapse he had to stop work for a time and receive medical attention.

Recalling this period of Lebedev's life, Kliment Timiryazev writes:

"Some years ago, sick and fatigued by our confounded exams, he finally took his doctor's advice and went for a holiday somewhere in the mountains of Switzerland. On the way, he stopped at Heidelberg and climbed to Wolf's astronomical observatory on Mount Königstuhl. The famous scientist Wolf told him that the eyes of all astronomers were on him and that he was the only one from whom they expected solutions of the problems interesting them.

"Deep in thought, he made his way back from Königstuhl, pondering over the problem occupying his mind and, at last, hit upon the solution. On the next day, forgetting about his vacation and doctor's orders, instead of continuing his journey southwards, he turned north towards stifling and dusty Moscow. The work went on for months and years, day and night. . . ."

The famous experiment required more than eight years of dogged labour. Often it seemed that the result would be negative, that the pressure of light on gases could not be

measured. But failures did not discourage Lebedev; on the contrary, they made him look for other variants of the experiment with greater energy and persistence. Deep conviction that the physical theory was correct and faith in himself helped him to forget his failures and to press on and on.

It would take too much time to describe all the stages of the great road along which the physicist advanced towards his goal. Some things, however, need to be told.

In addition to the incredibly small force of light pressure and, consequently, the difficulty of constructing a measuring instrument that would register this force, there were difficulties connected with the physical nature of the interaction of light and molecules.

Gas molecules are complex systems; they consist of positively-charged nuclei with negatively-charged electrons around them. Under the action of the electromagnetic waves of light, the molecule charges oscillate under compulsion and the molecules respond to the repelling action of a ray of light. As we have already seen, this interaction between light and molecules will become most intense when the frequency of electrical and magnetic force changes in a light wave coincides with the frequency with which the molecule charges oscillate. When such a coincidence (resonance) of frequencies takes place, the energy of the light ray is absorbed by the molecules and they respond to the corresponding repulsive force. Consequently, in order to receive and measure this light pressure, Lebedev had to separate rays of a definite frequency from a beam of light in which oscillations of various frequencies went on, and select gases whose molecules would sensitively respond to these frequencies. He found the necessary "sensitive gases." The gases that proved to be suitable for the experiment were carbon dioxide, methane, ethylene, acetylene and, in particular, propane and normal butane.

But then the following big difficulty arose. When the gas in chamber *A* (fig. 26) was pierced by light rays, the latter lost some of their energy through absorption in the fore

layers and were somewhat weakened by the time they reached the rear layers; as a result, the fore layers absorbed more light (and were consequently heated more) than the rear ones. Different temperatures arose between the fore and rear layers and this produced convection currents in the gas. The problem now was to eliminate this difficulty.

Lebedev spent a long time over the problem, finally arriving at a solution after numerous experiments. In *Experimental Research Into the Pressure of Light on Gases*, a paper summing up the results of his work, he wrote:

"During the long preliminary experiments, which were undertaken in order to work out the necessary type of piston apparatus (it will be described later—*V. D.*), the most easily obtainable gases were used: acetylene, carbon dioxide and lighting-gas. A very remarkable result was achieved, namely, the force of pressure, measured in the lighting-gas, proved to be the same in different apparatuses, while in the case of carbon dioxide and acetylene there were wide fluctuations between the positive and negative magnitudes. The idea came to me that the reason for this peculiarity of lighting-gas was in its higher heat-conductivity which depends on the *hydrogen* admixture. . . ." That was the key to the problem! In several other gases, hydrogen stands out for its high heat-conductivity. Consequently, if hydrogen is added to a gas with "sensitive" molecules, it will rapidly distribute the heat from the light rays in all the layers of the gas; in distributing the heat uniformly throughout the chamber, it destroys the convection currents, compels the gas to obey the "commands" of the ray of light and press on the little piston of the measuring instrument. It was impossible to conduct the experiment with pure hydrogen, since its molecules are among the least sensitive to the frequencies of electric and magnetic force changes in a ray of light.

Thus, was selected the hydrogen admixture for the gases used in the experiment.

The next difficulty was to choose the source of light. The theory with whose help it was possible to determine the

magnitude of light pressure on gases, demanded that all the rays of a light beam be parallel. This could only be achieved at the cost of reducing the energy of the light stream, because the optical instruments which regulate the direction of the light rays absorb a considerable part of the rays' energy during their passage through them. It was therefore necessary to have a very powerful source of light in order to detect the minute pressure that light exerts on gases. The theory had to be amended and a beam of converging rays utilized. In this case, the rays pierce the gas unevenly: pockets with different temperatures and, consequently, densities form inside it; the danger of perturbation seemed to rise again. But here, too, hydrogen came to the rescue by dispersing the foci of heterogeneous density.

The greatest difficulty, however, lay in constructing the whole apparatus, adjusting its numerous parts and combining them into a single, smooth-working mechanism. This required long and painstaking work.

During his experiments on the pressure of light on solid bodies and gases, Lebedev discovered that light performs mechanical work. The energy of light is usually converted into other forms of energy before it is made to perform mechanical work, but in Lebedev's experiments, light impulses drove the mechanism of the measuring instrument and the latter was displaced under the action of these impulses.

Let us review the main parts of the wonderful mechanism which converted the energy of a ray of light into the mechanical movement of the rocker of a torsion balance, where gas was the transmitter of motion from light to the mechanical system.

The famous apparatus is shown on fig. 27. Naturally, this drawing does not show the entire complexity of the apparatus. The gas used in the experiment filled chamber A. A beam of light passed through windows B_1 and B_2 and pressed on the gas molecules. In order to give the gas an outlet when it becomes heated and sharply expands during the initial moment of illumination, the chamber had an

aperture (K), which connected it with an auxiliary chamber. The main part of the chamber was partitioned off by a wall (D) with apertures at the top and bottom. In the right part was a light mobile piston (E) of the extremely sensitive recording instrument, in this case, a torsion balance (V). The left part of the chamber was illuminated by rays from a powerful source.

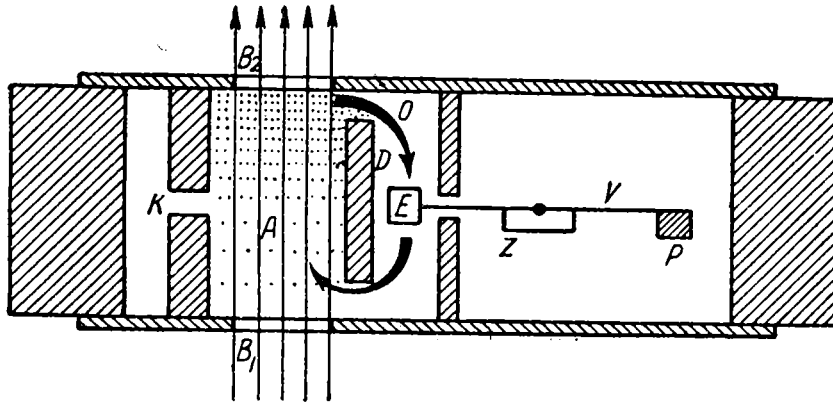

Fig. 27

Under the pressure of light, the gas molecules moved in the same direction as the light rays; as a result, the pressure of the gas at the chamber's rear wall was somewhat higher than at the front wall. As it strove to equalize the pressure throughout the whole chamber, the gas passed through the upper aperture (O) to the lower one (in the drawing an arrow shows the direction taken by the gas). The resultant effect was that driven by the pressure of light the gas moved in a circle and pressed on the piston (E). The latter was connected to the rocker of the torsion balance (V), which had a counterbalance (P) and, in the middle, a little mirror (Z); the ray of light reflected by the mirror helped to register the displacement of the rocker. The torsion balance was suspended from the upper wall of the apparatus by a very thin quartz thread; it cost the scientist much effort and time to make this thread. It is worth recalling again that in these experiments he had to measure pressures that were

several hundred times lower than in the experiments on the pressure of light on solid bodies and, therefore, the measuring instrument naturally had to be much more sensitive.

The following gives a clearer idea of the difficulty of measuring this extremely small pressure. In the layer of gas several millimetres high, the difference in temperature between its lower and upper parts is only a thousandth of a degree but that is enough to produce convection currents which deflect the torsion balance as much as a stream of gas produced by the pressure of a beam of light. One can easily imagine the struggle Lebedev had to carry on against these forces which prevented him from observing the pressure of light on gases.

The size and form of the gas chamber proved to be of particular importance. Many complicated experiments had to be made before a chamber of the right size was finally selected.

The number of different variants of the experiment was enormous. Suffice it to say that Lebedev constructed about twenty measuring instruments. All the fine mechanisms used in these experiments were figured out and designed by Lebedev and constructed by A. I. Akulov, a remarkable mechanic who was trained by Lebedev personally.

It was an uphill road that led to the discovery of laws which govern the forces of nature. There were many moments of despair when there was cause to believe that the idea of measuring the forces of light pressure was impracticable. The very hypothesis on the existence of these forces was, as we have already pointed out, put forward 300 years before. In the course of three centuries, keen human minds sought to convert this promising hypothesis into a scientific fact, into a weapon of research into natural phenomena. Many great scientists, tried experimenters all, attempted to solve this age-old riddle. But they all failed and, naturally, that made other experimenters pessimistic on this score.

Maxwell's theory put forward the surmise that light exerted pressure. But scientists were not convinced. They wanted experimental proof.

Lebedev went on with his experiments for eight years, and, in the end, nature succumbed before his titanic will and mind. His heroic, selfless labour yielded the long-awaited fruits. That happened at the beginning of 1909.

In December 1909, Lebedev demonstrated the results of his long years of work at the Moscow Congress of Naturalists. That same year a famous paper was published by scientific journals. Its concluding words were:

"The fact that light exerts pressure on gases has been proved experimentally... The hypothesis on the pressure of light on gases, which was advanced 300 years ago by Kepler, has thus been substantiated both theoretically and experimentally."

This discovery made a tremendous impression. Lebedev was warmly congratulated by prominent scientists of all countries. For instance, Schwarzschild, the eminent astronomer, wrote:

"I well remember with what mistrust I heard in 1902 about your intention to measure the pressure of light on gases and I was the more amazed when I read how you eliminated all difficulties."

Lebedev's victory was, at the same time, a triumph of the first school of Russian physicists, which, together with its teacher, occupied an honourable position in world science.

It must be emphasized that the discovery of light pressure on gases was the basis for the subsequent development of the theory of the interaction of light and matter. While Lebedev was working on his discovery, scientists arrived at the conclusion that in order to explain certain physical phenomena it was necessary to fall back on the notion that light is a stream of unique particles (these have been named photons). Light displayed a double nature: besides its wave properties, it proved to have corpuscular properties—properties inherent in particles.

If a stream of photons, of which a ray of light consists, falls on gas, a collision takes place between the photons

and molecules, and that is exactly what calls forth light pressure. Subsequently, it turned out that the so-called elementary act of light pressure—the collision between a photon and a molecule or another microscopic part of matter —obeys the laws of an elastic impact, that is to say it may, to a certain extent, be likened to a collision between two billiard balls.

Lebedev's researches showed other investigators the path leading to the discovery of the laws governing the pressure of light on separate particles of matter. From the standpoint of the photon theory of light, the mechanism of light pressure presented itself in a different way, namely, as the bombardment of the surface of bodies by photons having mass and a quantity of motion.

At the present, physics is synthesizing the wave and corpuscular concepts of the nature of light.

The fundamental task of the plan of scientific investigations that the young Lebedev mapped out for himself twenty years before was thus carried out. It would seem that after such extensive and strenuous work, he should have given himself a breather, the more so that this was demanded by his broken health. But the scientist's active mind knew no rest. He was lured by other, still more complicated problems.

The purposefulness of Lebedev's investigations did not by any means narrow down his range of scientific interests or cause him to pay less attention to progress in physics. He was among the first to investigate X-rays. In 1897, he wrote in his diary: I am busying myself with Becquerel rays; I want to know how far they resemble X-rays and where the difference between them lies." He was interested in technical problems, particularly in jet-propulsion. His notebooks contain a number of drawings which anticipated the ideas underlying modern jet engines.

LEBEDEV AS A PEDAGOGUE

Before proceeding to describe the new plan of research, let us descend into "Lebedev's cellar" and see how the great physicist's beloved school fared at this period. This young centre of science was given an extraordinarily figurative and vivid description in one of Kliment Timiryazev's[1] articles.

"In 'Lebedev's cellar,' as it was christened long ago by those who hold Russian science dear, beats the pulse of real and not scholastic science, not the one that speaks well only of the services of former years and ages, but the one in which is expressed the life of today's science and tomorrow's technique. Here Lebedev finds the time to guide the work of about twenty-five researchers, introducing into their efforts his surplus of ideas and his amazing inventiveness. Guidance of twenty-five researchers cannot be compared even to playing chess simultaneously against twenty-five opponents. Although there is only one opponent—nature—none of the games bear any resemblance for each other; new moves and new tactics have to be invented every time. Not everyone has the ability to remember what every researcher is working on and not only do the right thing in each case

[1] Kliment Timiryazev attentively followed the scientific successes of Lebedev and his school. He supported all of Lebedev's patriotic undertakings as best he could. The friendship between the two great men was very sincere and warm.—*V.D.*

and give the necessary instructions, but also avert a clumsy step and prevent loss of time, and, what is most important, communicate by example and counsel the thing that keeps people going, the enthusiasm for scientific work without which one cannot be a real scientist.

"A feature of the people working in Lebedev's laboratory, as in all other active centres of modern physics, is that each makes his own implements of labour, because these are not ready-made instruments that can be bought in a shop provided the price, no matter how high, is paid, but things that are worked out, created and improved as the work on a problem develops. Everyone is his own fitter and carpenter, optician and glass-blower, sometimes attaining skill that cannot be matched by anyone in the workshops of the most famous firms. But what a cheerful and independent spirit and what confidence in one's own strength this inspired physical labour instils!"

Lebedev's school grew and developed; the number of pupils increased and they delved ever deeper into important problems. Although each was set a different task by Lebedev, these tasks were like rivulets, as it were, that emptied into a stream, the waters of which were directed by the teacher's creative genius. This unity of ideas linked the teacher with his pupils and the pupils among themselves into a harmonious body of researchers.

A wonderfully warm picture of Lebedev as a pedagogue and the teacher of a rising generation of scientists is given in the reminiscences of his pupils. One of them, Professor N. A. Kaptsov, writes: "Pyotr Nikolayevich demanded first and foremost that each of us have a strict plan of work. But as far as Lebedev was concerned this plan was not something frozen and lifeless. He always suggested a new line whenever new prospects presented themselves in the course of a research. He would instantly hit upon a host of fresh ideas, be carried away with them and infect the beginner with his own enthusiasm by outlining the broad horizons that awaited him. Listening to him at moments such as these,

our sole desire was to work tirelessly in constant contact with him."

"The teacher may have been sharp at times," recalls Professor V. D. Zernov, "and, perhaps, even unjust to a beginner, but we saw his infinite solicitude for the work of his pupils, his willingness to help a beginner over a difficulty and his leniency in time of real failure and, because of that, none of us noticed his sharpness and all were ready to follow him whatever the road he chose."

Another of Lebedev's pupils, the late Academician P. P. Lazarev (died in 1942), who was himself the head of an important school of physicists, wrote: "Besides his great learning, he had an extraordinarily simple approach even to a beginner. From the outset, I was amazed at the patience with which Lebedev heard out the opinions of physicists, who sometimes upheld an obviously wrong viewpoint."

"Once a week," Professor N. A. Kaptsov recalls, "the pupils working in Pyotr Nikolayevich's laboratory and some of the senior workers of the Institute of Physics gathered for a colloquium in the so-called small physics auditorium that was then on the third floor. These colloquiums were started when we were still in the old physics laboratory and were held at the round table in the library. All of us—students, senior workers of 'Lebedev's cellar' and Pyotr Nikolayevich himself—shared in the colloquiums on an equal footing and had to review current literature on physics. With his questions to the speaker and his always interesting and witty remarks, Pyotr Nikolayevich drew everybody into the discussion. Every physicist working under Lebedev rejoiced the day when after long and persistent labour he was permitted to report to the colloquium on his own research. Pyotr Nikolayevich was very exacting in this respect. He allowed no one to make a report or send an article to the press until it was written in a proper literary style."

This picture of friendly, creative work by a body of researches that was united around the great scientist is rounded off by P. P. Lazarev in his reminiscences on the first time he attended one of these colloquiums. He wrote:

"Everybody spoke simply and unconstrainedly; one involuntary forgot that the famous Pyotr Nikolayevich Lebedev, who was already known throughout the world for his researches into short waves and the pressure of light, was among the participants in the colloquium. There was no subordination and no servility and I think that Lebedev even liked it when anybody vehemently raised an objection. At this colloquium, the first I attended, I was astounded at Lebedev's colossal, encyclopaedic store of knowledge. There was not a question raised by the speaker that Lebedev was not acquainted with or on which he did not make a few remarks."

Lebedev shared with his pupils the joys of creative labour and, together with them, was pained when there were failures. It depressed him when the work of any of them proceeded slowly or was unsuccessful. In a letter to P. P. Lazarev, he mentions his feelings about a research that failed:

"Do not imagine that it was easy for me to watch them failing to do the task; I felt that I was to blame and that I was a poor teacher. . . ."

While he was away taking treatment, he ignored the protests of his doctors and corresponded regularly with his pupils. His letters, which followed one another in quick succession, contained advice or instructions on various aspects of their work, such as changes that had to be introduced or the ways of overcoming the difficulties that arose. Beginners frequently received voluminous instructions in which Lebedev described in detail the purpose of the work, the apparatuses that had to be made, their possible designs, the course that the research should take, and so forth.

The following are extracts from instructions sent to the student Altberg on May 25, 1901. These contain 25 detailed

pointers on method, advice, and paternal injunctions. The document vividly shows how much energy the teacher devoted to train young scientists.

"15) During your final experiments you will need a Rayleigh Disc with which to check the constancy of your buzzing machine. Make a mark on the ceiling (use a plumb), from which the plumb will hang *approximately* 50 cm. away from the mouth of the source in the di-

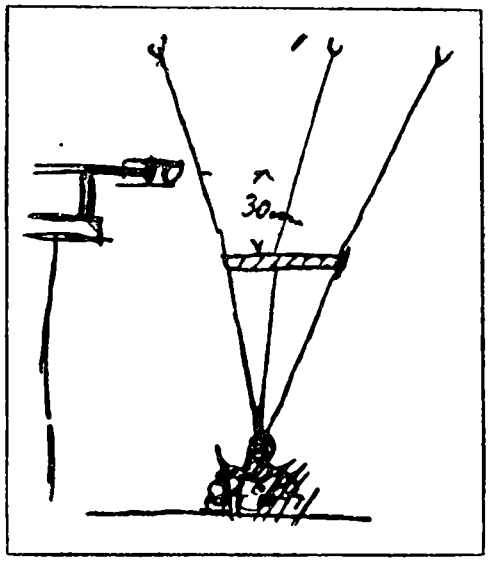

Fig. 28. Drawing by Lebedev

rection of the sound. At *approximately* 1 metre from this mark, let Ivan screw in three hooks (you will have to buy them—they cost 10-15 kopeks).

"To these hooks you will attach thin (see they do not curve to the side) *iron* (so that they do not stretch like copper or string) wires; to these attach a *wooden disk* on a wooden triangle (we have some ready-made ones). The disk must be at least *30 cm. below* the line of the Kundt tube. To prevent the disk from being tossed by air currents, let the wires almost reach the floor and tie a weight (about 18 lbs.) to it. Before fixing the disk see if it will conveniently hold a protecting cylinder made from an iron net with a dia. of 30-35 cm. (§ 11), *quite* like the cylinder in the pressing apparatus.

"16) In order to suspend the Rayleigh Disc, have Ivan make a gadget like the one for the pressing apparatus, only see that the frame

is *flat* (*without* bent edges) and of somewhat thicker copper (0.3 mm.). Solder a copper pin *R* to the bottom. To this pin, by means of *sealing-wax*, you will attach a carefully chosen *straight*, almost capillary, thin-walled, *40-cm.*-long tube. In the middle you will place a zinc Rayleigh Disc, 0.2 mm. thick (or about that) and 3-5 cm. in diameter. Place a small mirror at the bottom of the tube.

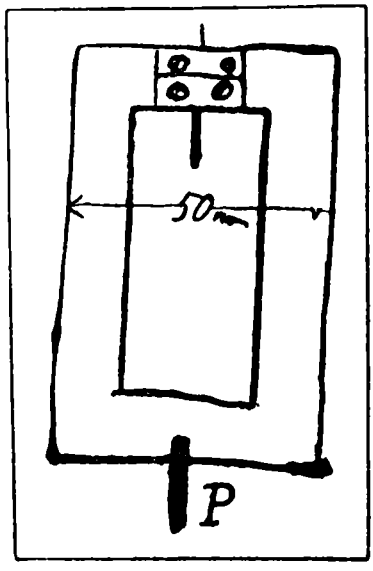

Fig. 29. Drawing by Lebedev

"17) Make sure that the frame is either in the plane of the wave or perpendicular to it. Also make sure that the damper is properly attached and is perfectly symmetrical as regards the frame....

"22) The natural and rather unpleasant obstacle in your work will be that you will find yourself in everybody's way when you start systematic observations. To avoid driving everybody out of the laboratory you will have to work in the *morning and evening* when it is empty. *In my name*, ask A. P. Sokolov to allow you to work during these hours, if that proves necessary.

"23) To avoid unnecessary complications in the readings during the final observations, you will undoubtedly need an assistant with whom *you will alternate,* so that, firstly, you can convince yourself that the apparatuses are working correctly and, second, so that you can take the mean figures in order to eliminate *subjective peculiarities in the readings.*

"24) In conclusion, I shall tell you of your personal traits: first, do not strive for external beauty in your apparatuses—do not plane and do not polish anything: remember the hours you wasted planing boards that in the end were thrown away; let the rough stand of your apparatus serve you as an example. Second, you work energetically and well while everything runs smoothly, but the slightest hitch is enough to upset you—that shortcoming lies in your inexperience; work that goes on without hitches does *not* exist, you must always be ready for *that* and take it calmly. At the moment you do *not* have any major difficulties; you have achieved enough to start measuring sound pressure; I am *quite sure* that you will complete the work. Now everything boils down to completing it in the *best possible way*—there are *no limits* there; therefore, a certain boundary must be set beforehand. I think you will do a good job if you manage to determine the absolute relation of pressure and the Rayleigh Disc

within an accuracy of +*25 per cent*. I am saying this with full account of *all* the difficulties you may encounter: for a *first* effort in determining this relation, that accuracy is *quite* enough; besides, at present in acoustics there are *no* absolute measurements of intensity, not even a convenient method of determining the *order of its magnitude*, and therefore, at the moment, there is *no need* for greater accuracy.

"25) Arrange your work so that by the beginning of *November* you will have a buzzing apparatus and stop at a certain intensity. I think that by *Christmas* you will *easily* be through with the pressing apparatus measurements with pistons of various sizes (prepare the apparatus in November and in December begin a series of observations—simultaneously with a "normal" Rayleigh Disc). Your work should end there. If there will be difficulties you may continue until Shrovetide.

"I repeat: do not hanker after more, after work with discs of *different* dimensions—you can always do that later. Make a good job of the principal measurements.

"Another piece of advice: get down to your article on the "Absolute Measurement of the Intensity of Sound" at once and describe the following *as though for a final version*: a) Source of sound (and its peculiarities), b) pressure of sound, c) Rayleigh Disc—*with all the necessary quotations*: that will give you an opportunity to arrange your work better and more expediently—in a way that will make it convincing to an outsider as well. *Recast it over and over again*, knock it into shape, preserving all that is necessary and deleting *everything* superfluous. Personally, I always write my article while I am on a job and gradually correct and change it.

"During your experiments, i.e., until Shrovetide, *constantly* think *only* of your work, *do not* occupy yourself with preparations for the exams: you will attain the maximum in your power *only* by concentrating all your thoughts on your work.

"P. Lebedev"

The great scientist and patriot trained not only pupils. He looked upon outstanding young physicists as the future leaders of Russian schools of physics and endeavoured to pass on to them his extensive and completely new experience of organizing and guiding a group of beginning scientists. The demands that he made of the scientist and teacher were exceedingly high. In a letter to P. P. Lazarev, whom Lebedev quickly marked out as the future head of a scientific school, he pointed out:

"In assigning a task to a beginner, or, in other words, in setting out to shape a future scientist, we must clearly see our moral duty to him. There is nothing easier than to cripple such a beginner; all that is necessary is to place him before a problem that is both interesting and full of unexpected pitfalls—he will find himself in a jam over details, waste time on them and become disappointed. Therefore, your moral duty is to give a beginner a task only when you are certain that the result will be clear-cut and attainable."

Lebedev's pupils saw in him a splendid example of selfless devotion to science. Naturally, his influence was of great educational value and left a deep imprint on the history of the first major school of Russian physicists.

A NEW PLAN

> "For a long time to come the unbounded universe will pose us with one unsolved problem after another. Thus, mankind is faced with an endless path of scientific endeavours. . . ."
>
> (*F. A. Bredikhin.*)

For Lebedev to live meant to create, to investigate the most complicated physical phenomena, to reveal the innermost secrets of nature. He was whole-heartedly devoted to science, extremely modest about his work, and did his utmost to be useful to mankind.

"My private life," he wrote at a period when his health was particularly bad, "is so bare of joys that I would not be sorry to part with it. . . . My only regret would be that with me would die a very useful machine for the study of nature: I would have to carry my plans away with me for I cannot bequeath to anybody my experience and my knowledge as an experimenter. I know that twenty years from now these plans will be carried out by others, but what a cost to science a delay of twenty years is!"

So, in spite of his weak health, Lebedev planned to carry out what he himself called "monstrously difficult" experiments. Briefly, the idea behind these experiments was the following.

Experimental research into the properties of electromagnetic waves, on the one hand (this concerns the experi-

ments that established dual refraction and other properties of ultra-short electromagnetic waves), and the discovery and measurement of light pressure on solid bodies and gases, on the other, further confirmed the theoretical conclusion that the physical nature of light and electromagnetic waves is the same and that the only difference is in their length.

Lebedev showed that electromagnetic waves possess a certain mass and can be "weighed." Thus was established the connection between the properties of electromagnetic waves and the properties of bodies or the particles of which these bodies consist (molecules, atoms or their components —electrons, protons, neutrons, and so forth). This conclusion was a tremendous achievement of the human mind for it showed that there is a bond between various forms of moving matter and elucidated the nature of the interrelation between electromagnetic waves and the particles of matter.

By shedding light on the main features of the bond between electricity, magnetism and light—three of the forces of nature—Lebedev's researches in effect marked the completion of a stage in the development of physics.

But in nature there is yet another force which governs the movement of the planets, stars, comets and other cosmic bodies—a force that compels bodies to fall on the Earth. This is the force of gravity and it may be said to be omnipresent. Besides their electrical interaction, two charged bodies are drawn to each other by the law of gravity; the same is true of magnetized bodies. Under the influence of this force, even a ray of light bends if it passes close to a large cosmic body.

The "big game" that Lebedev set out to hunt for was the bond between the force of gravity and the forces of electromagnetism.

The idea of starting a new series of physical researches came to Lebedev immediately after he completed his work on the pressure of light. He gave a clear outline of his far-reaching plan for the future in a letter to Kliment Timiryazev:

"I think I have struck upon a very important correlation," he wrote. "The magnetic properties of rotating planets are linked with the gravitational properties of matter.... But I remember Mendeleyev saying: 'It's all very well talking, but try and prove it!' Well then, at the moment I am busy on a plan of new experiments. They will be monstrously difficult and will demand tremendous outlays, for they are only possible with huge masses. But a positive result may have a great influence on the entire teaching of electricity. As you see, these are far-going plans and if Erb (Lebedev's attending physician—*V. D.*) will give me the health, I shall carry them out."

Here the question concerned a search for the link between the rotation of big bodies and their electromagnetic properties. This problem was and continues to be one of the most interesting in physics. A satisfactory solution has yet to be found. Once again we see Lebedev choosing one of science's main and most complicated problems as the object of his investigations.

What data did science have at its disposal to facilitate an approach towards the solution of this highly important problem? The following interesting phenomenon was discovered in 1908. Numerous observations showed that the Sun consists of a nucleus with a very high temperature (in the centre it runs into millions of degrees) and burning-hot gases that form an envelope called the photosphere around this nucleus. Long ago, scientists noticed the periodic appearance of indefinitely shaped dark spots (they can sometimes be seen with the naked eye) on the surface of the photosphere. These spots were carefully studied.

The spectroscope is the principal instrument for studying heavenly bodies. This instrument receives the light from a heavenly body and forms a spectrum of it. The spectrum made it possible to determine the components of the heavenly body in question and even to study the physical processes taking place in it. When scientists directed the spectroscope to any part of a sun-spot they discovered that

in the spectrum each of the spectral lines splits into several thin, closely arranged lines. In their laboratories physicists had already observed this phenomenon: the lines of a spectrum split if the matter to which the spectrum belongs is in a strong magnetic field. The natural surmise was that a sun-spot is a kind of magnet that acts on the hot gas of the photosphere and calls forth the splitting of spectral lines. The question was how does a magnetic field form in a sun-spot?

Scientists advanced a hypothesis which we shall explain by recalling certain physical facts. A magnetic field which may be disclosed with the help of a compass needle forms around a wire when an electric current passes through it. Physicists established that in a conductor electricity is conditioned by the movement of electrons: a miniature magnetic field forms around each electron and these tiny fields unite and together make up the observed microscopic magnetic field.

Scientists extended this mechanism of communication between the movement of electric charges and a magnetic field to sun-spots as well. The hypothesis was that sun-spots are huge vortices of matter in the thick of the photosphere. These vortices comprise charged particles which, in rotating, form the magnetic field observed with the help of a spectroscope.

Lebedev was the first to appreciate the above-described phenomenon and used it as a point of departure for a new series of remarkable researches that he outlined in his letter to Timiryazev.

MAGNETOMETRIC STUDY OF ROTATING BODIES

For a long time people knew that the Earth is a gigantic magnet, but the origin of the Earth's magnetism remained a mystery.

There did not appear to be any bond between the magnetism of the Earth and the sun-spots. But the keen-minded scientist linked these two seemingly divergent phenomena. What made him do it?

We know that the direction of a magnetic field depends on the direction taken by the charges forming it. By determining the direction of a magnetic field we find the direction in which the body producing this field moves. Thus, a study of the sun-spots' magnetic field made it possible to determine the direction in which the vortices of the photosphere rotate. The hypothesis was that these vortices give rise to a magnetic field.

Lebedev's attention was attracted to the circumstance that the direction of the Earth's magnetic field has a similar relation to the direction in which the Earth rotates as the direction of the sun-spots' magnetic field has to the direction of the vortical movement of the photosphere in the sun-spots. Utilizing this fact, he put forward the bold surmise that in both cases the physical causes for the appearance of magnetic fields are the same—in other words, that the Earth's magnetism is conditioned by its rotation around its own axis.

But let us give the floor to Lebedev. He expounded his idea simply and clearly in a letter to M. K. Golitsina:

"For certain reasons that I shall not dwell upon, I concluded that all rotating bodies must be magnetic and that the peculiarity that our Earth is magnetic and attracts the blue tip of a compass needle to the North Pole is conditioned precisely by its rotation around an axis. But that is only an idea. We need an experiment and I am preparing one: I shall use an axis that turns with a speed of more than a thousand revolutions per second—at the moment I am designing such an apparatus—and run it through balls with a diameter of three centimetres each; the balls will be made from different materials—copper, aluminium, cork, glass, and so on. When the balls turn, they *must* become magnetized like the Earth. To be convinced of that I shall use a tiny magnetic needle—only two millimetres long—and attach it to a fine quartz thread; its end *must* be attracted by the pole of the rotating ball."

The task of solving the riddle of the Earth's magnetism by means of a laboratory experiment was certainly a bold one, but Lebedev was confident of success.

Before starting these experiments, he needed a concrete idea about the reasons for the Earth's magnetic properties. He put forward an original hypothesis, whose essence boils down to the following. Let us examine any material body. It consists of molecules, while the molecules in their turn consist of atoms, each of which is a system of positively- and negatively-charged particles. If the body we are studying is static, the positive and negative charges of every molecule will be in direct proximity to each other so that the molecules as a whole represent a neutral system. When in motion, such systems do not produce a magnetic field. Now let us make this body rotate swiftly. Its particles will strive to move as far away as possible from the axis of rotation. Since the negatively-charged particles (electrons) are considerably lighter than the positively-charged ones (atom nuclei), they must draw farther away from the axis of rota-

tion when the body rotates. As a result, an original polarization, i.e., the separation of negative and positive charges, takes place under the action of a mechanical force. On the basis of this idea, we may assume that negative charges must appear on the surface of a rotating body. When in motion, such a system of separated charges gives rise to a magnetic field.

In an article dedicated to Lebedev's memory, Kliment Timiryazev tells us how this hypothesis was verified in practice. He wrote:

"People entering his laboratory ... were struck by an unusual noise that sounded something like a whistle and a buzz. When, with his wonted courtesy Pyotr Nikolayevich showed and explained this new creation to me, I jokingly remarked: 'If I understand you correctly, this is something like Laval's separator: the one that separates cream from skim milk, but yours separates negative electricity from positive electricity.' He burst out laughing and said: 'I suppose so, only my separator has to make several thousand revolutions per second.' "

The reason for such a speed was that in these experiments it was necessary to reproduce a model of the globe. While revolving around the Sun, the Earth simultaneously spins like a top around its own axis. At the equator, the linear speed of the Earth's rotation is 464 metres per second. Consequently, in order to attain such a linear speed on a model of the globe with a diameter of, say, half a metre, the model has to spin with a speed of several thousand revolutions per second (that is easily calculated since we know that the globe's radius is approximately 6,400 kilometres).

Let us now proceed to a description of the design of one of the first "separators" (a demonstration of this apparatus at a congress of naturalists and doctors strongly impressed everyone present).

In order to verify his hypothesis, Lebedev first experimented with rotating rings. The arrangement of the appara-

tuses is shown in fig. 30. At the left is a ring (*AA*) which rotates around the axis *O*; at the right is a model (*BB*). Between them is a magnetometer (*M*), an instrument for measuring the intensity of a magnetic field (that is why the research we are reviewing was called *Magnetometric Study of Rotating Bodies*). Before going on to the experiment

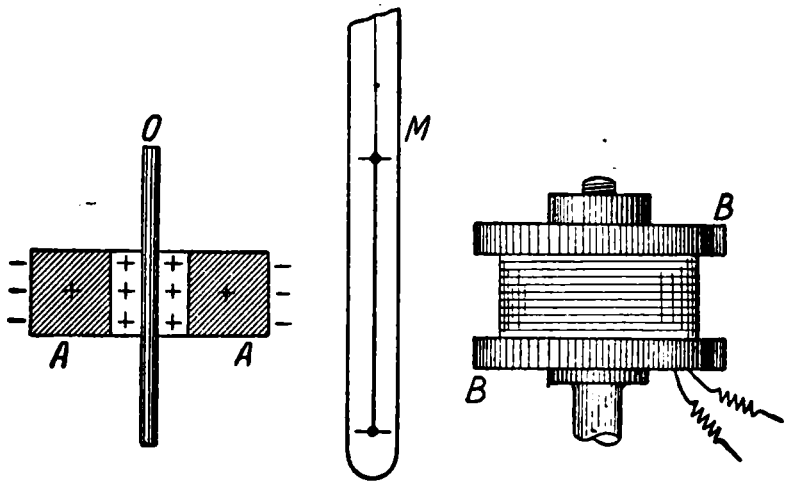

Fig. 30

itself, it is necessary to say something about the very cleverly constructed model *BB*. The "separation" hypothesis holds that while a body rotates negative charges are densest on its surface and become rarer towards the middle. In order to make this law work on a model, the ring was made of short close-fitting ebonite cylinders, on which wires of different lengths were wound spirally; this produced a system of solenoids inserted into one another. These solenoids were interconnected by a common circuit through which a current of a definite intensity was passed. As a result of the different number of turns of wire, a different amount of electricity flowed through each layer of the ring; that gave the illusion that the electric density decreases as it passes from the edge to the centre.

Such a system produced a definite magnetic field, the intensity of which was measured with a magnetometer. The intensity of the magnetic field could be changed by changing the strength of the current. Lebedev's theory made it possible to calculate the strength of the current that should be passed through the model in order that a magnetic field with an intensity of 0.34 oersted (which is equal to the intensity of the magnetic field at the Earth's equator) should form around it. During the experiment, the current that was passed through the model had a strength which caused the formation of a magnetic field with an intensity that was equal to the Earth's field. While this was taking place, it was noted that the magnetometer's needle showed a deflection. Then the electric current was switched off; that caused the magnetic field to disappear and the disk *AA* to rotate. According to Lebedev's hypothesis, the rotating disk had to form a similar magnetic field as the model *BB* and, consequently, the magnetometer had to show the same reading. But that did not happen.

The experiments with rings were, so to say, only a rehearsal. Mainly, they helped to master the method of conducting experiments in a new and uninvestigated field of physical research and to test different variants of future precise measurements.[1]

The first steps towards the fulfilment of the big plan were taken and that inspired the scientist with hope. He prepared himself for a new, decisive struggle against nature, trusting that he would wrest from it yet another closely-guarded secret. . . .

---

[1] Lebedev foresaw that measurements with an extremely fine degree of accuracy would be needed for future research into the magnetic field of a rotating body. Indeed, that conclusion has been corroborated by modern physics. Lebedev's ideas were revived in the works of some foreign scientists almost 40 years later, but his experiments in this field were forgotten. For example, in a paper entitled *The Magnetic Field of Massive Rotating Bodies*, published by the journal *Nature* on May 17, 1947, Prof. P. M. S. Blackett makes no mention at all of Lebedev's researches.—*V. D.*

THE LAST YEARS

But let us return once more to Lebedev's school and see how the work in the "cellar" was progressing.

The school developed steadily both in size and quality. Many of Lebedev's pupils had already taken their master's degree; some became heads of independent chairs and, in their turn, began to train a new generation of scientists. For example, P. P. Lazarev, one of Lebedev's outstanding pupils, organized a new branch of the Lebedev school. This branch engaged in many useful researches in biophysics, a field that is allied to both physics and biology. In organizing a body of young scientists, Lebedev sought to train them to serve science selflessly in the spirit of the glorious traditions of Russian science.

"Pyotr Nikolayevich," V. D. Zernov wrote in his reminiscences, "set our dormant feelings in motion; he knew ... how to inculcate in us a love for science and an enthusiasm that was big enough to last a life-time and which we are passing on to our own pupils as best we can."

At learned congresses, Lebedev's school spoke as one man. Its fame spread abroad and its prestige grew by leaps and bounds. It seemed that a new era had dawned in Russia's scientific life. But the events of 1911 ordained otherwise.

The tsarist government aimed to keep the peoples of Russia in darkness and ignorance and was least of all interested in promoting science. The black shadow of the Stoly-

pin reaction fell across Moscow University. 1911 was the most dismal year in the annals of Russia's oldest university.

This was a period when the government, frightened by the Revolution of 1905, began to take extreme measures to suppress everything advanced and progressive in Russia. The Stolypin whip penetrated into the University as well and a real police regime was established there.

The student disturbances were savagely repressed by the tsarist Minister Kasso. On January 11, 1911, the Council of Ministers issued a decree prohibiting student meetings in educational establishments and ordering all police officers to take swift and resolute measures against them. This decree aroused the indignation of the University heads and they lodged an official protest with the government. The reply to this came quickly: Professor A. A. Manuilov, the rector of the University, Professor P. A. Minakov, the pro-rector, and Professor M. A. Menzbir, the assistant rector, were relieved of their administrative duties and of their posts as professors.

As a sign of protest against this reactionary policy, a large group of leading professors handed in their resignations. They included K. A. Timiryazev, N. A. Umov, N. D. Zelinsky, A. A. Eichenwald, and other men who were the pride of Russian science. Altogether, the University lost 124 of its best teachers.

A difficult problem faced Lebedev. The work to which he had dedicated his life was falling to pieces. It was not easy for him to leave the University. "Historians, jurists, and even medics," he said, "can go at once, but I have a laboratory and what worries me most is that more than twenty pupils will follow me. It is not hard to interrupt their work, but it will be harder, even impossible, to set them up somewhere else. As far as I am concerned that is a question of life."

Lebedev had no right to a pension and he had no savings whatever; by leaving the University he would lose his flat,

which was at the Institute of Physics, and everything else in life—the possibility of continuing his dearly beloved work and the means of supporting himself and his family.

His sister witnessed his deep tragedy. Later she said: "For several days Pyotr did not sleep. He suffered all the time. He could not make up his mind to leave. If you only knew what a terrible tragedy it was for him.

"He felt and saw his whole life's work crumbling. He changed very much in the course of those few days; his hair turned grey, he lost weight, but he decided to act as a self-respecting man would. He decided to go."

The teacher was followed by the pupils.

The news that Lebedev had left the University quickly reached other countries. Svante August Arrhenius, the eminent scientist and director of the physics and chemistry laboratory at the Nobel Institute in Stockholm, wrote to Lebedev:

"Naturally, it would be a great honour for the Nobel Institute if you wanted to work there and we would, unquestionably, provide you with every means so that you would have the opportunity of carrying on with your work. It goes without saying that you would have complete freedom of action as befits your rank in science."

But Lebedev was too much of a patriot to take up this flattering offer. He was not concerned with his own fame and well-being. He wanted to restore his school, to continue training the young scientists who followed him and placed their destinies in his hands; that was his greatest worry when by choice of the tsar's satraps he found himself in the streets. Happily, assistance came quickly. The advanced, progressive section of the Russian intelligentsia appreciated the importance of Lebedev and his school for the development of science in Russia and swiftly responded to the call of those who held scientific progress dear. Contributions by many Russian progressives made possible the speedy organization of a new "Lebedev's cellar."

In the spring of 1911, a private flat was rented at 20 Myortvi Lane (the present Nikolai Ostrovsky Street), apparatuses were bought and a workshop set up. The friendly body of scientists, united and inspired by their beloved teacher, did a tremendous amount of work in a short time. In the course of the summer the flat was converted into a laboratory and research was started by autumn.

That was the first physics laboratory to be organized privately by Russian progressives and it saved a cradle of science that was dear to all Russian people.

Lebedev and his family moved into the rooms over the laboratory. Once again he was surrounded by numerous pupils and once again inspired them with his bold ideas and guided them in their work.

But the political regime of those days made itself felt even here.

The government prohibited gatherings, including scientific meetings that were not connected with the educational work of an "official" establishment. That made it difficult to convene the school's traditional colloquiums. In order to legalize these colloquiums, Lebedev organized the Moscow Physics Society, drafted the rules and submitted an application for an "official" standing for this society. Permission was soon received and the colloquiums were renewed; these subsequently became known as meetings of the Lebedev Physics Society and played a great role in bringing Moscow physicists together.

Lebedev drew up a big and bold plan of research for his school. In a report to the Ledentsov Society[1] in which he set forth the immediate aims of research in the new laboratory, he wrote:

"Research into the entire spectrum of matter opens before us the opportunity of penetrating into the geometric arrange-

[1] This society was founded by Kh. S. Ledentsov, a wealthy Russian manufacturer, who set out to promote science in Russia and to encourage the application of research in practice. Lebedev's school received a great deal of material assistance from this society.—*V. D.*

ment of charges in separate atoms and molecules, studying their structure, and launching upon the solution of numerous problems of physics and chemistry. This tremendous task, which the electronic theory of matter sets spectral analysis, is placing before spectroscopy an unbounded field of interesting and fruitful work, but its solution demands systematic research into different parts of the spectrum."

The following will help to explain the essence of this programme of research and show how it is linked with Lebedev's preceding work. In the researches into the interaction between waves and resonators and in measuring the pressure of light on solid bodies and gases, Lebedev discovered certain general laws governing the interaction between electromagnetic waves and molecules and between the former and macroscopic resonators. The next step in studying the interaction of light and matter was to elucidate the inner mechanism of this interaction. What happens inside a molecule when an electromagnetic wave falls on it or when it radiates light itself? The answer can be given only if we know how the charged particles are arranged in the atoms and molecules, the mechanism by which they are linked among themselves, and numerous other data about the bodies of the microworld which are inexhaustible as regards properties. The spectra of matter yield a great deal of data of this kind. It has already been mentioned how the nature of sun-spots was revealed with the help of a spectroscope.

Today, the spectroscope is used for investigations into the most intricate processes taking place in the depths of matter. The spectrum proved able to tell us much about what is hidden from our direct perceptions. Spectral analyses (researches into the composition and structure of matter by its spectra) are now applied in all research laboratories and in industry.

Lebedev foresaw this great significance of spectroscopy and for that reason gave investigations into the spectra of matter priority in the new plan of research that he drew up for his school.

The laboratory in Myortvi Lane became the scene of tense research. The future held out further opportunities of enlarging the school and increasing the scope of its scientific activity. On private funds, collected by the Ledentsov Society, work was started on an Institute of Physics specially intended for Lebedev's school. Lebedev helped to design the building for the institute, the kind of institute that he dreamed of for a long time. But he was not destined to work in it.

Sleepless nights, the deep suffering caused by his resignation from the University and the cares and worries over the organization of the new laboratory took a fatal toll on his health.

Lebedev died in the prime of life on March 14, 1912, when he was only 46 years old, sharing the fate of Lomonosov, Stoletov, Pushkin, Lermontov, Belinsky and many other great men who were strangled by tsarism.

"The blade of a guillotine is not all that kills. Lebedev was killed by the pogrom at Moscow University," K. A. Timiryazev wrote indignantly.

"When will Russia finally learn to value her outstanding sons, who are the real pillars of the motherland?!" I. P. Pavlov bitterly exclaimed.

The death of the beloved teacher was a terrible blow to those whom he had led towards the gleaming summits of science. Professor V. D. Zernov wrote in his reminiscences:

"All his pupils, friends and crowds of young people came to pay their last respects to the beloved teacher. The coffin in which the brilliant and forever departed scientist lay was buried under wreaths laid by academicians, universities, learned societies, friends, followers and undergraduates. The followers wept over the coffin of their teacher as children over the coffin of parents."

The heavy loss suffered by Russian science caused grief among scholars the world over.

Lebedev's death called forth an angry protest by progressive Russian scientists against the tsarist autocracy, which was directly responsible for this death.

In an article entitled *The Death of Lebedev*, K. A. Timiryazev wrathfully declared:

"This new sacrifice brings to mind with renewed force the involuntary cry that once tore out of Pushkin's aching breast—a cry of anguish, a cry that was more a curse: 'What damned luck that being endowed with brains and talent I should be born in Russia!' They silenced Lebedev. They silenced Moscow University. They will silence Russian science as well. But who will measure the moral corruption of the country's young people who are being mobilized for the struggle against this, their chief intellectual force?"[1]

The article ends with the prophetic words:

"Having lived through one rebirth[2], the country will live through another when the balance of moral forces will be in favour of 'slaves of honour' like Lebedev. Then and only then will people of intellect and feeling finally have the opportunity of living in Russia and not only of being born in order to die of a broken heart."

Timiryazev wrote these words five years before the outbreak of the Great October Socialist Revolution.

---

[1] This was written during the reign of the Black-Hundreds, whose "exploits" were inspired by the tsarist minister Stolypin.—*V. D.*

[2] Timiryazev is referring to the reforms of Peter the Great.—*V. D.*

CONCLUSION

Mankind's first socialist state opened up broad prospects for the advance of science. The Communist Party, the Soviet Government and the people have surrounded scientists with love and care. On a rich soil, the seeds sown by Lebedev have sprouted luxuriant shoots. The teacher died, but his noble, patriotic undertaking was continued and developed by his followers. Lebedev foretold that "the time will come when physicists will be needed in Russia." That time has come. The young scientists from Stoletov's laboratory and the Lebedev "cellar" received unbounded opportunities to implement and advance the ideas of their teacher.

V. K. Arkadyev, N. A. Kaptsov, A. K. Timiryazev, A. B. Mlodzeyevsky and other followers of Lebedev rejoined Moscow University after the Great October Socialist Revolution and launched upon large-scale research.

Corresponding member of the Academy of Sciences of the U.S.S.R. Vladimir Konstantinovich Arkadyev (died in 1954), together with his pupils, established a magnetic laboratory at the University and studied important scientific-technical problems linked with electromagnetic processes in metals.

In addition, Arkadyev's school studied very short electromagnetic waves. A woman colleague of Arkadyev's, A. A. Glagoleva-Arkadyeva invented a radiator of ultra-short electromagnetic waves. That made it possible to investigate the properties of a sector of the electromagnetic waves scale

that was partially discovered by Lebedev. The fruitful work done by Arkadyev's school has yielded splendid results.

This branch of the Lebedev school produced scientists of the calibre of Academician B. A. Vvedensky and N. S. Akulov, member of the Academy of Sciences of the Byelorussian S.S.R., who became the heads of young scientific bodies.

Professor of Moscow State University Nikolai Alexandrovich Kaptsov founded a laboratory for the study of electrical phenomena in rarified gases. His laboratory established close contact with industry and did much to promote the utilization of scientific achievements in a number of its most important branches. Today, a big group of scientists is working fruitfully under Kaptsov's guidance.

During the initial years of Soviet power, Professor Arkady Klimentovich Timiryazev started a course of theoretical physics at Moscow University. He wrote two important textbooks—*Kinetic Theory of Matter* and *Introduction to Theoretical Physics*—which contributed immensely towards the scientific and ideological training of young physicists. He organized and headed Moscow University's first chair of the history of physics. He was the editor of the first monographs on the history of physics: *Essays on the History of Physics in Russia*, by a group of professors of the Department of Physics at Moscow University, and *History of Physics*, Vol. I, by Professor P. S. Kudryavtsev.

Timiryazev died on November 15, 1955.

Upon returning to the University, Professor Anatoly Boleslavovich Mlodzeyevsky carried on successful research into thermodynamics and began to read a general course of physics. His scientific work is closely connected with the requirements of Soviet industry.

One of Lebedev's oldest pupils, corresponding member of the Academy of Sciences of the U.S.S.R. Torichan Pavlovich Kravets, who died recently, carried on scientific and pedagogical work at a number of institutions of higher learning. In 1926 he founded a laboratory of scientific

photography at the State Optical Institute; he did considerable research into the history of physics.

After the Great October Socialist Revolution, Academician Pyotr Petrovich Lazarev became the head of the Institute of Physics that his teacher had designed and where he had hoped to work. He founded a new trend in science —biological physics. A whole school of young physicists formed around Lazarev. One of them was Sergei Ivanovich Vavilov, the late President of the Academy of Sciences of the U.S.S.R. and leader of an important school of physicists. He headed the Physics Institute which bears Lebedev's name.

Other members of Lazarev's school include Academician V. V. Shuleikin, who leads the investigations into the physics of the sea and other important fields of scientific knowledge; A. S. Predvoditelev, corresponding member of the Academy of Sciences of the U.S.S.R., who heads a school of physicists working in the sphere of thermal and molecular phenomena; Professor B. V. Ilyin, who heads a school of physicists working in a sphere allied with physics and chemistry.

Considerable space would be required for a list of all the schools and scientific trends, which were founded by the first school of Russian physicists—Lebedev's followers and their pupils. Suffice it to say that at the present time the number of young scientists who were trained in the above schools and who are now in the van of Soviet science, is above a thousand. The tree of science planted by Pyotr Nikolayevich Lebedev is flourishing.

В. ДУКОВ

ПЕТР НИКОЛАЕВИЧ ЛЕБЕДЕВ

Printed in the Union of Soviet Socialist Republics